Spare Parts

Food Preparation Machines - Made in Sweden since 1941

Food Preparation Machines

Made in Sweden since 1941

hallde.com

FOLLOW US!

Get tips, inspiration and education! Visit our website!

Instagram **YouTube** **Linkedin** **hallde.com**

HALLDE News!

Serrated Slicers

Slice proteins

- 10 mm perfect for cooked chicken and halloumi
- 2 mm for salami and pepperoni

Grid Cleaner

Enables efficient cleaning and flexibility with three different dimensions.

Suitable for all Dicing Grids with dimensions 6x6, 8x8 and 10x10 mm.

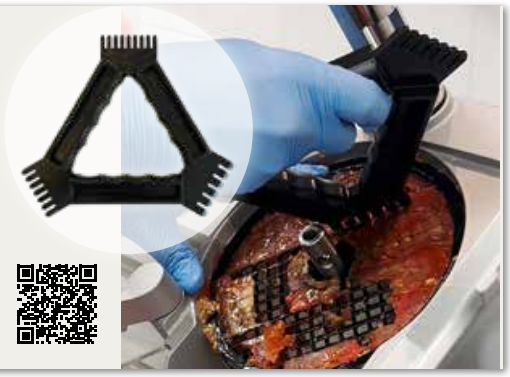

Soft Slicer 6 mm

Slices soft products. Perfect for use when dicing in combination with a suitable Dicing Grid.

Dicing kits

Kits used to cut cubes of both hard and soft vegetables, fruits and more.

Suitable for all HALLDE-machines capable of cutting cubes.

HALLDE Spare Parts 2026

Blender

SB-4 4

Vertical Cutters

VCB-32 6
VCB-31S 8
VCM-41 and VCM-42 10
VCB-61 and VCB-62 14

Combi Cutters

CC-32S 18
CC-34 20

Vegetable Preparation Machines

RG-50 22
RG-50S 24
RG-100 26
RG-200 28
RG-250 diwash 30
RG-250 33
RG-350 36
RG-350 Manual Push Feeder, Ergo-loop 38
RG-350 Feed Hopper 39
RG-300i 40
RG-300i Manual Push Feeder, Ergo-loop 42
RG-300i Feed Cylinder 43
RG-300i Feed Hopper 44
RG-300i 4-Tube Insert 45
Vegetable Preparation Machine RG-400i 46
RG-400i/ RG-400 Manual Push Feeder, Ergo-loop 49
RG-400i Feed Cylinder A 50
RG-400i Feed Cylinder B 51
RG-400i Feed Hopper 52
RG-400i/ RG-400 Pneumatic Push Feeder 54
RG-400i 4-Tube Insert 56
Vegetable Preparation Machine / Cheese Shredder: Cheese Feeder 57
RG-400 58
RG-400 Feed Cylinder 61
RG-400 Feed Hopper 62
RG-400 4-tube Insert 63

Spare Parts Cutting Tools

Cutting Tools for RG-100, RG-200, RG-250 diwash, RG-250 and RG-7 64
Cutting Tools for RG-350, RG-300i, RG-400 and RG-400i 66

Please note!

- Please state machine model and serial number when ordering.
- Please state item number and description when ordering.
- Prices are FCA, inclusive standard export packing.
- AB Hällde Maskiner reserves the right to make changes to machines, accessories, cutting tools and related prices without prior notification.
- We make a reservation against any printing errors.
- Our Technical Bulletin is sent out by e-mail when we have technical news. Please send us your e-mail address to tech@hallde.com if you are interested in the Technical Bulletin.

Machines that are presented in this catalog are available as CE, CB and EAC approved, NSF- and UL-listed models. Contact your local distributor for more information.

HALLDE is certified according to the international quality standard ISO 9001 and ISO 14001.

All plastic material in HALLDE equipment are BPA-free.

Attention!

Blender SB-4

No. on drawing	Item No.	Description	Pcs
10	23542	Support, lid	1
20	23171	Plug for camshaft	1
30	23157	Camshaft	1
40	23166	Springblade	1

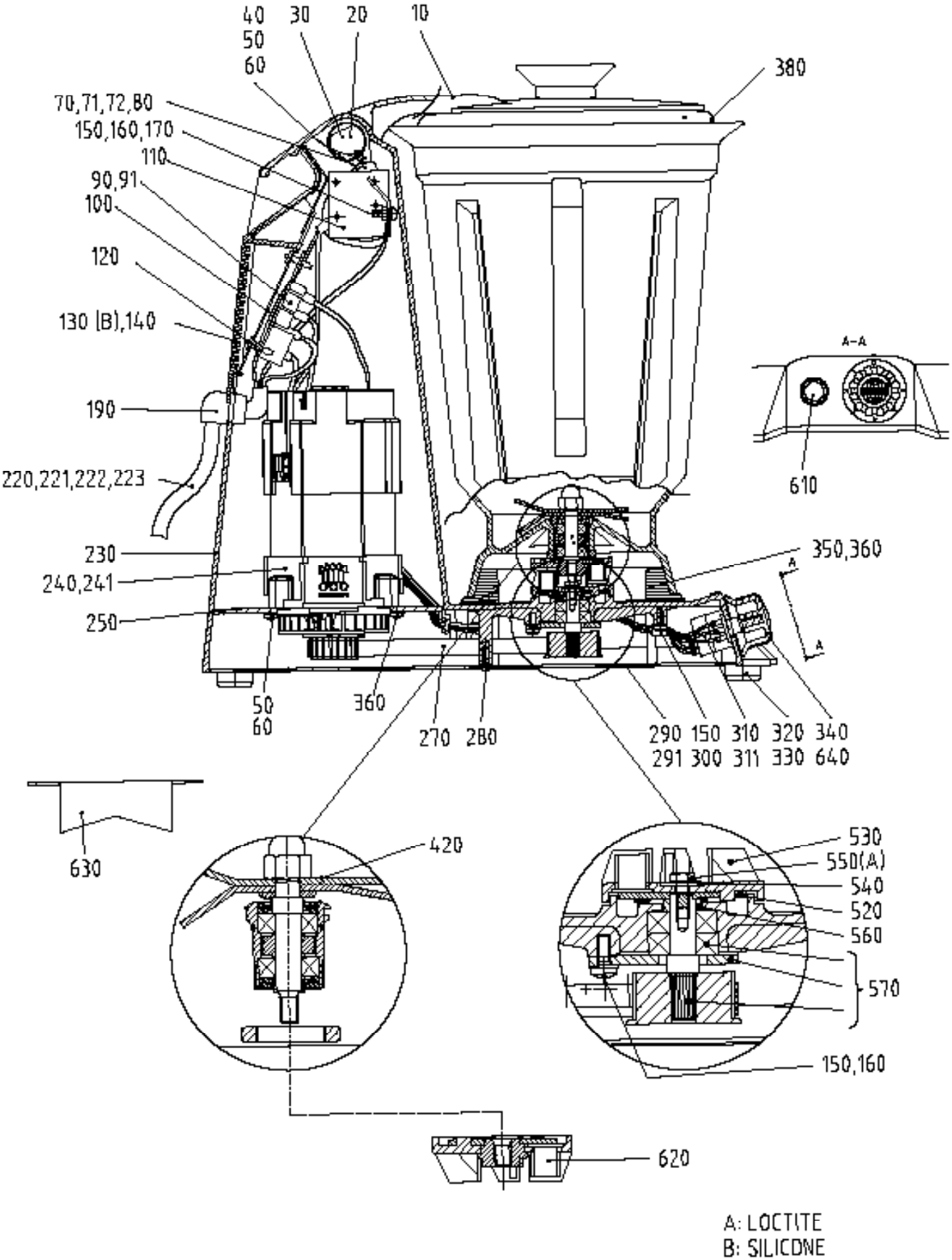

Blender SB-4

No. on drawing	Item No.	Description	Pcs	Price/pcs €
50	14339	Screw MRT M5X12 A4 T25	6	
60	14085	Lock washer FBB 5,1 A2	6	
70	15565	Micro switch XGT42C-86-S20Z1	1	
71	23227	Insulating barrier for switch	1	
72	14613	Screw RTK ST2.9X16 A2 70	2	
80	14062	Washer BRB 5,3X15X1,2	2	
90	24346	Pc-bord SB-4 230 1 50	1	
91	23180	PC-board 120V,SB-4	1	
100	23314	Protection plate, AM	1	
110	23313	Bracket, microswitch 120-240V	1	
120	15527	Bracket for PC-board AVC BS-9A	4	
130	23145	Louver	1	
140	14223	Screw MKFS M4X 10 A2 70	2	
150	14851	Screw MRT M4X10 A2	5	
160	14084	Lock washer FBB 4.1 A2	4	
170	14004	Nut M6M M4 A2 70	1	
190	15555	Cable retainer 1397 SR-17-2	1	
220	15151	Supply cord CB 1 phase SB-4	1	
221	23238	Supply cord 240V AUS	1	
222	23239	Supply cord 240V UK	1	
223	23237	Supply cord, 100-120V	1	
230	23558	Machine housing	1	
240	15727	Motor 220-240 1 50/60	1	
241	23327	Motor unit 110-120V 50/60	1	
250	23315	Motor plate	1	
270	15726	Belt megarubber PV J 406	1	
280	14424	Screw LKCSF M4X12 A2 70	1	
290	23312	Protection plate	1	
291	23325	Damping 100X230	1	
300	15357	Cable clamp	2	
310	23197	Potentiometer OMEG	1	
311	23184	Insulating barrier f. pot.OMEG	1	
320	10507	Foot, rubber BVO 22H10	4	
330	40786	Screw MSCS M4X10	4	
340	23148	Knob,indikator	1	
350	23144	Support for bowl	4	
360	14753	Screw RTF-PT 5.0X20FZB	4	
380	23141	Lid	1	
420	23334	Knives and dome nut	1	
520	23161	Washer for coupling	1	
530	23173	Coupling, machine	1	
540	14078	Washer	1	
550	14501	Screw M6SH M4X8 A2 70	1	
560	23150	Spacer ring L=4	1	
570	23326	Drive shaft compl.	1	
610	23322	Push button,pulse compl.	1	
620	23253	Coupling compl.. M6, JUG	1	
630	23248	Knife guard	1	
640	24138	Blade spring for knob	1	

Vertical Cutter Blender VCB-32

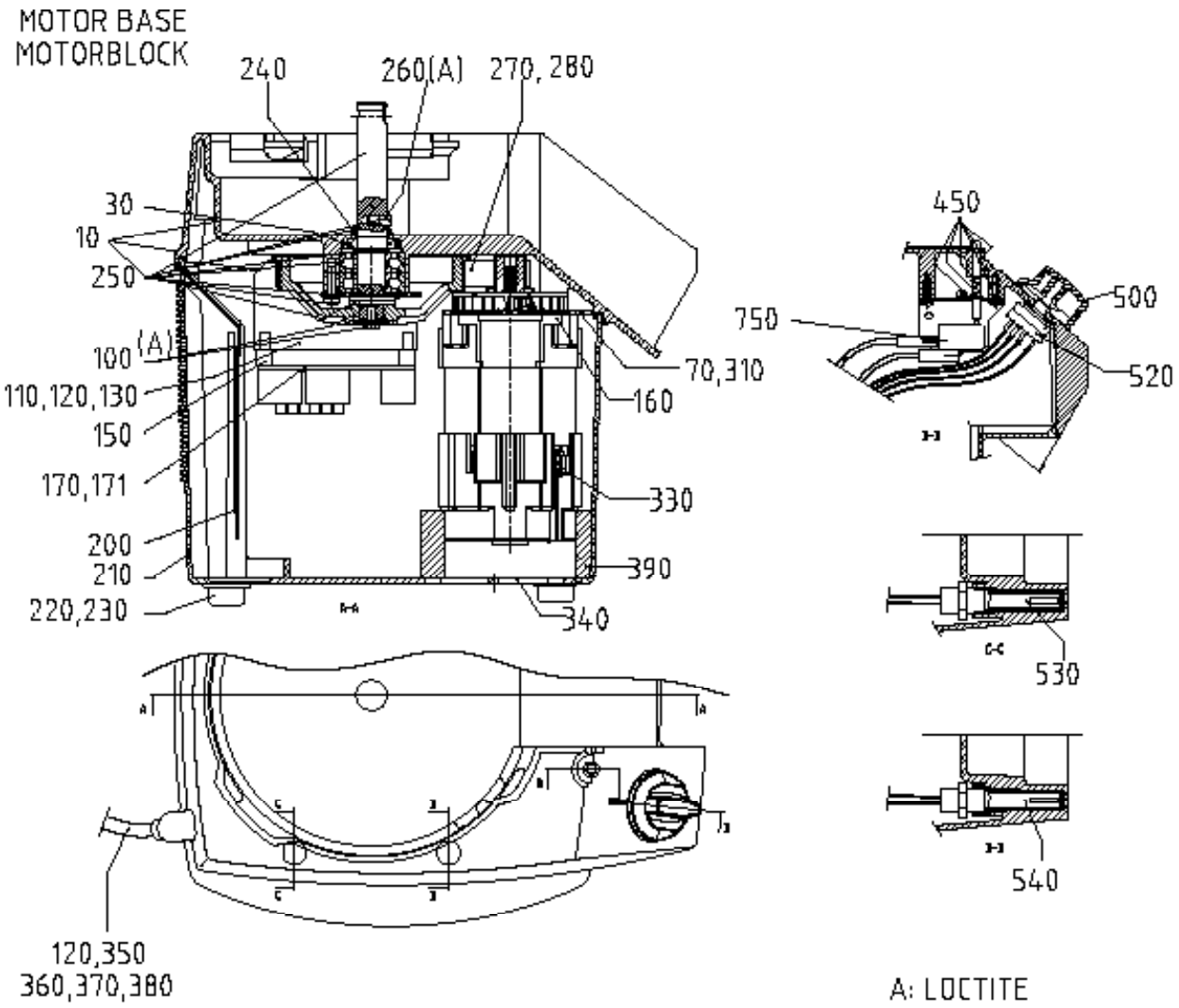

CUTTER/MIXER BOWL ATTACHMENT
SNABBHACKS-TILLSATS

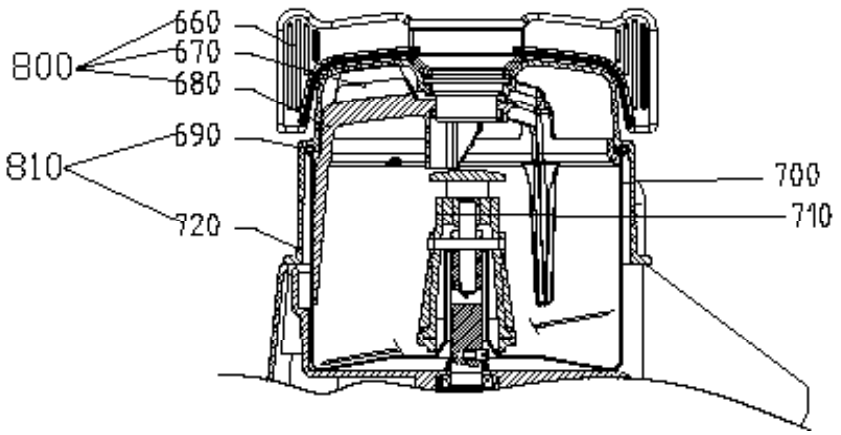

Vertical Cutter Blender VCB-32

No. on drawing	Item No.	Description	Pcs
10	1412	Housing, top inkl knife shaft	1
30	10259	Rubber seal washer 18X30X7	1
70	14344	Screw M5X12	4
100	1411	Pulley,knife shaft compl.	1
110	24293	El.-plate, AM	1
120	14851	Screw MRT M4X10 A2	8
130	14084	Lock washer FBB 4.1 A2	1
150	15527	Bracket for PC-board AVC BS-9A	4
160	14753	Screw RTF-PT 5.0X20FZB	4
170	24343	PC-board CC 230 1 50	1
171	24370	PC-board CC 100-120 1 50/60	1
200	24176	Protection plate	1
210	24340	Housing, base	1
220	10494	Rubber foot F-107 B	4
230	14333	Screw MRX M4X12 A2 70 PH	4
240	10263	Seal ring V-18A	1
250	1415	Knife shaft compl.	1
260	24146	Pin, knife shaft	1
270	10679	Belt GT 3MR 0408 18	1
280	24291	Pulley wheel	1
310	24292	Bracket, motor AM	1
330	15711	Motor 220-240 1 50/60	1
340	24300	Net	1
350	15149	Supply cord CB 1 phase CC-34/VCB-32/RG-50	1
360	10589	Strain relief clamp 55-016-89	1
370	14336	Screw MRT M4X25 A2 70 T20	2
380	15422	Cable support NK-5N	1
390	24296	Seal ring, fan	1
450	1413	Activator pin, safety switch	1
500	24152	Knob,speed cont with spring	1
520	24294	Rotary switch, CC-34-1	1
530	24278	Magnetic switch,safety	1
540	24274	Magnetic switch, speed control	1
660	24134	Scraper handle	1
670	24132	Scraper blade	3
680	24135	Scraper ring	1
690	24133	Seal ring dia.5	1
700	24151	Bowl 3L	1
710	24153	Knife unit	1
720	24172	Lid	1
750	24335	Micro switch unit compl AM UL	1
800	24244	Scraper assy	1
810	24245	Lid incl. seal ring	1

Vertical Cutter Blender VCB-31S

MOTOR BASE
MOTORBLOCK

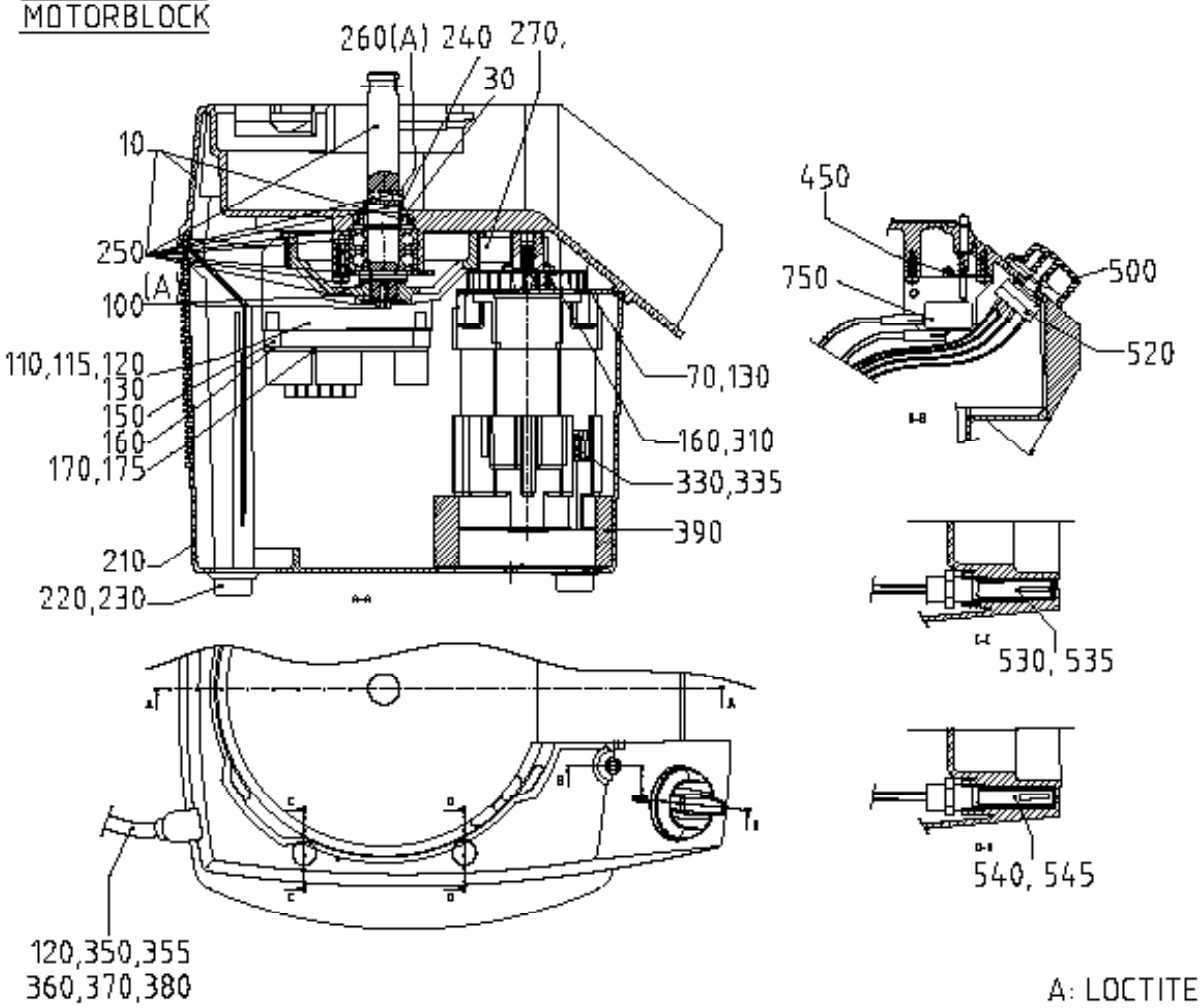

CUTTER/MIXER BOWL ATTACHMENT
SNABBHACKS-TILLSATS

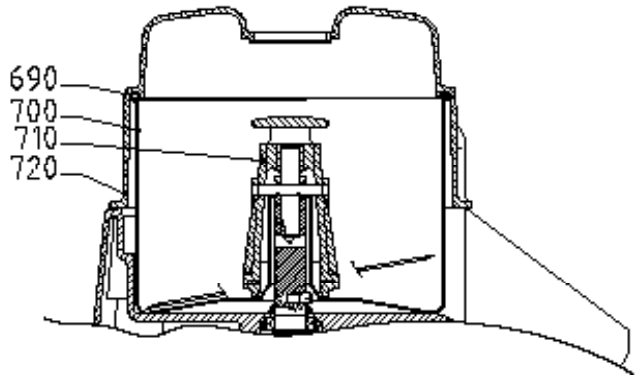

Vertical Cutter Blender VCB-31S

No. on drawing	Item No.	Description	Pcs
10	1412	Housing, top inkl knife shaft	1
30	10259	Rubber seal washer 18X30X7	1
70	14344	Screw M5X12	4
100	1411	Pulley,knife shaft compl.	1
110	24293	El.-plate, AM	1
115	24268	El-plate, UL	1
120	14851	Screw MRT M4X10 A2	5
130	14084	Lock washer FBB 4.1 A2	1
150	15527	Bracket for PC-board AVC BS-9A	4
160	14753	Screw RTF-PT 5.0X20FZB	4
170	24343	PC-board CC 230 1 50	1
175	24370	PC-board CC 100-120 1 50/60	1
210	24340	Housing, base	1
220	10494	Rubber foot F-107 B	4
230	14333	Screw MRX M4X12 A2 70 PH	4
240	10263	Seal ring V-18A	1
250	1415	Knife shaft compl.	1
260	24146	Pin, knife shaft	1
270	10679	Belt GT 3MR 0408 18	1
310	24292	Bracket, motor AM	1
330	15711	Motor 220-240 1 50/60	1
335	15775	Kit Motor 110V CC-34, VCB-32, RG-50	1
350	15149	Supply cord CB 1 phase CC-34/VCB-32/RG-50	1
355	24211	Supply cord 120v US	1
360	10589	Strain relief clamp 55-016-89	1
370	14336	Screw MRT M4X25 A2 70 T20	2
380	15422	Cable support NK-5N	1
390	24296	Seal ring, fan	1
450	1413	Activator pin, safety switch	1
500	24222	Knob 0-1 w. blade spring	1
520	24295	Rotary switch, CC-32-1	1
530	24278	Magnetic switch,safety	1
535	24332	Magnetic switch, safety AM UL	1
540	24274	Magnetic switch, speed control	1
545	24333	Magnetic switch, speed control	1
690	24133	Seal ring dia.5	1
700	24151	Bowl 3L	1
710	24153	Knife unit	1
720	24172	Lid	1
750	24335	Micro switch unit compl AM UL	1

Vertical Cutter Mixer VCM-41/42

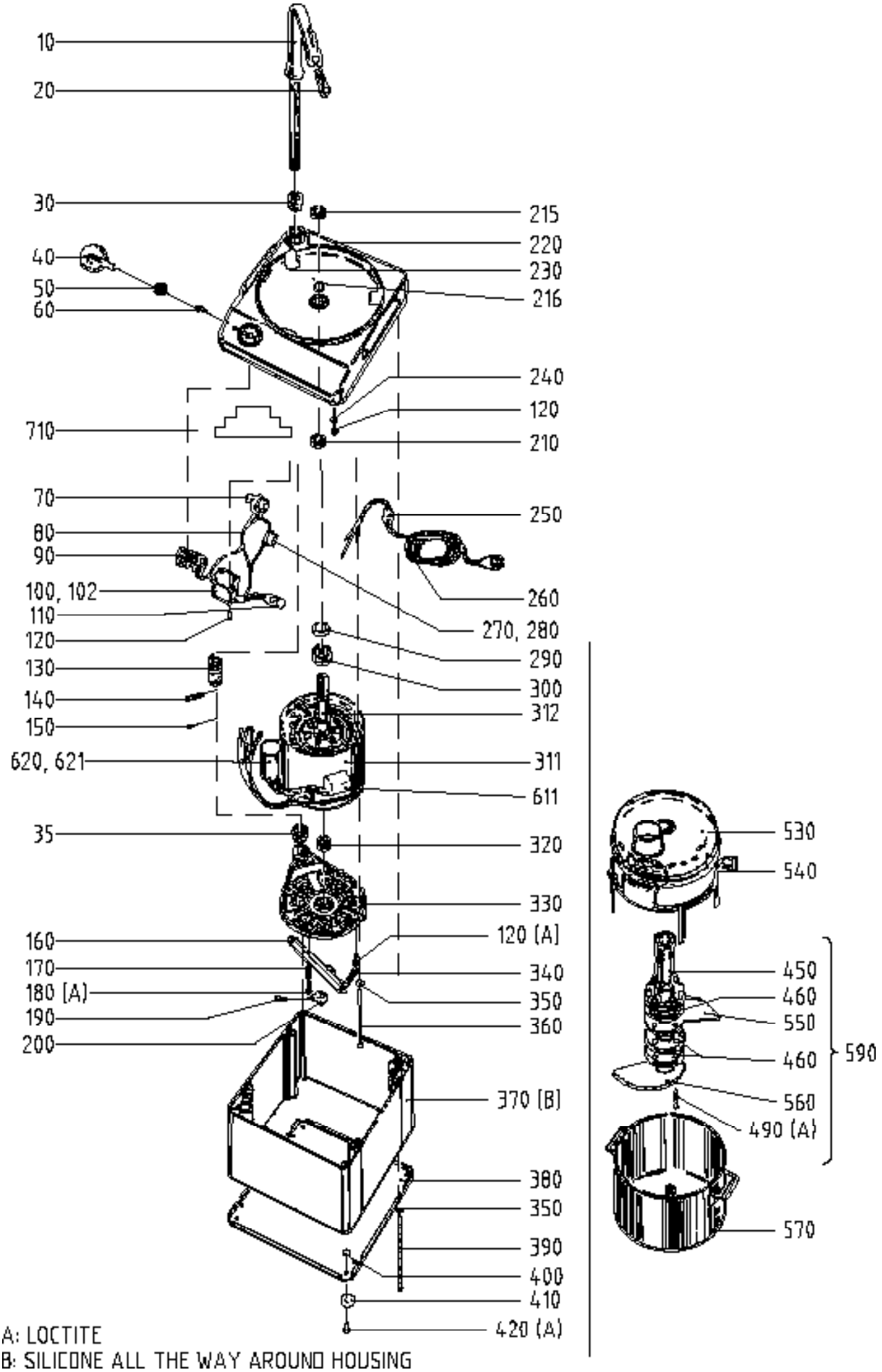

A: LOCTITE
B: SILICONE ALL THE WAY AROUND HOUSING

Vertical Cutter Mixer VCM-41

No. on drawing	Item No.	Description	Pcs
10	22034	Safety arm	1
20	22068	Magnetic switch HM-17	1
30	22486	Bushing, safety arm, upper	1
35	22064	Bushing, safety arm	1
40	22091	Twist knob pulse 0-I	1
50	10384	Seal washer V-10A	1
60	14131	Screw MFX-H M4X16	2
70	15769	Safety micro switch	1
80	22085	Wire harness AWG compl.	1
90	15468	Selecting switch CA20, US	1
100	15815	Contactor BF1210A110	1
102	15810	Contactor 11BG0610A230	2
110	15111	RC-circuit 110v	1
110	15110	RC-circuit 230v	1
120	14332	Screw MRX M4X10 A2 70 PH	5
130	22062	Spring, pressure	1
140	22493	Pin	1
150	14771	Screw RXK-H ST 4,2X9,5 FZB	1
160	22071	Brake device L=165	1
170	22063	Sleeve	1
180	14336	Screw MRT M4X25 A2 70 T20	2
190	14754	Screw RX-TP 6-19X20 FZB	1
200	22046	Cam knob	1
210	10451	Sealwash 20X30X5 TRA200200	1
215	10450	Seal washer BAUD2SL 25X35X7	1
216	10262	Seal ring V-18S	1
220	22216	Top cover VCM-41/42	1
230	22043	Buffer	3
240	14084	Lock washer FBB 4.1 A2	3
250	15636	Cable retainer PR 15,2 metal	1
260	15147	Supply cord CB RG-100/200/250/350/61/41	1
260	15208	Supply cord SJT3X14 AWG, US	1
270	15384	Fuse T100MA	1
280	15385	Fuse holder	1
290	10373	Pre load washer 46X38X0,4	1
300	10420	Ball bearing 6005-2RS1	1
311	15740	Stator VCM-41 110-120 1 60	1
311	15741	Stator VCM41 220-240 1 50/60	1
312	15730	Rotor VCM/FP41 550W	1
320	10421	Ball bearing 6003-2RS	1
330	22220	Motor shield	1
340	22457	Draw spring	1
350	14085	Lock washer FBB 5,1 A2	8
360	22055	Screw, M6S M5X159,5 8,8 FZB	4
370	22040	Machine housing compl.	1
380	22042	Protection plate	1
390	22054	Screw, housing M5X175	4
400	14004	Nut M6M M4 A2 70	4
410	10494	Rubber foot F-107 B	4
420	14424	Screw LKCSF M4X12 A2 70	4
450	22060	Knife head	1
460	22067	Spacer, knife	3
490	14154	Screw MFS M5X35	4
530	22426	Lid for bowl, PSU-4L	1
540	22427	Scraper for bowl PSU 4L	1
550	22391	Knife-upper, serrated-4L	1

Vertical Cutter Mixer VCM-41

No. on drawing	Item No.	Description	Pcs
560	22392	Knife-lower, serrated	1
570	22053	Bowl 4L	1
590	22390	Knife unit	1
611	15283	STARTING RELAY, 100V	1
611	15282	Starting relay, 2000V	1
620	15285	CAPACITOR 240 MF, 120V	1
620	15280	CAPACITOR 60 MF, 260V	1
621	15284	CAPACITOR 20 MF, 400V	1
621	15281	CAPACITOR 20 MF, 400V	1
710	22691	Kit time relay	1

Vertical Cutter Mixer VCM-42

No. on drawing	Item No.	Description	Pcs
10	22034	Safety arm	1
20	22068	Magnetic switch HM-17	1
30	22486	Bushing, safety arm, upper	1
35	22064	Bushing, safety arm	1
40	22092	Twist knob pulse 0-I-II	1
50	10384	Seal washer V-10A	1
60	14131	Screw MFX-H M4X16	2
70	15769	Safety micro switch	1
80	22187	Wire harness AWG 3 phase	1
90	15467	Selecting switch CA10, US	1
102	15810	Contactor 11BG0610A230	2
102	15818	Contactor 11BG0610A400	2
110	15110	RC-circuit 230v	1
120	14332	Screw MRX M4X10 A2 70 PH	5
130	22062	Spring, pressure	1
140	22493	Pin	1
150	14771	Screw RXK-H ST 4,2X9,5 FZB	1
160	22071	Brake device L=165	1
170	22063	Sleeve	1
180	14336	Screw MRT M4X25 A2 70 T20	2
190	14754	Screw RX-TP 6-19X20 FZB	1
200	22046	Cam knob	1
210	10451	Sealwash 20X30X5 TRA200200	1
215	10450	Seal washer BAUD2SL 25X35X7	1
216	10262	Seal ring V-18S	1
220	22216	Top cover VCM-41/42	1
230	22043	Buffer	3
240	14084	Lock washer FBB 4.1 A2	3
250	15623	Cable ret. PR 18,5 metal dia12	1
260	15173	Supply cord 3 phse	1
270	15384	Fuse T100MA	1
280	15385	Fuse holder	1
290	10373	Pre load washer 46X38X0,4	1
300	10420	Ball bearing 6005-2RS1	1
311	15747	Stator VCM-42 380-415 3 50/60	1
312	15735	Rotor VCM-42 3-phase	1
320	10421	Ball bearing 6003-2RS	1
330	22220	Motor shield	1
340	22457	Draw spring	1
350	14085	Lock washer FBB 5,1 A2	8
360	22055	Screw, M6S M5X159,5 8,8 FZB	4

Vertical Cutter Mixer VCM-42

No. on drawing	Item No.	Description	Pcs
370	22040	Machine housing compl.	1
380	22042	Protection plate	1
390	22054	Screw, housing M5X175	4
400	14004	Nut M6M M4 A2 70	4
410	10494	Rubber foot F-107 B	4
420	14424	Screw LKCSF M4X12 A2 70	4
450	22060	Knife head	1
460	22067	Spacer, knife	3
490	14154	Screw MFS M5X35	4
530	22426	Lid for bowl, PSU-4L	1
540	22427	Scraper for bowl PSU 4L	1
550	22391	Knife-upper, serrated-4L	1
560	22392	Knife-lower, serrated	1
570	22053	Bowl 4L	1
590	22390	Knife unit	1
710	22692	Kit time relay	1

Vertical Cutter Blender VCB-61 / VCB-62

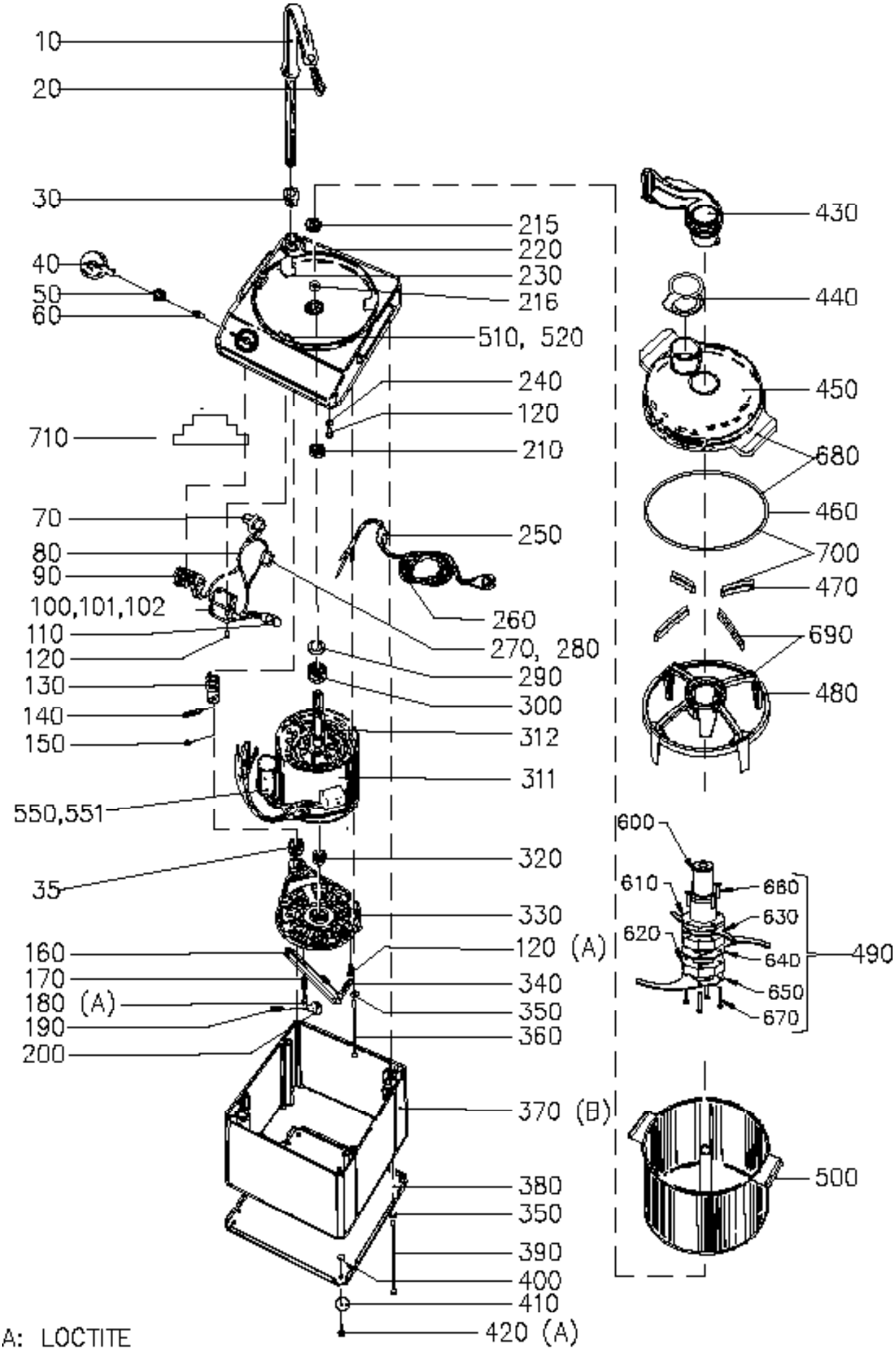

Vertical Cutter Blender VCB-61

No. on drawing	Item No.	Description	Pcs
10	22133	Safety arm	1
20	22068	Magnetic switch HM-17	1
30	22486	Bushing, safety arm, upper	1
35	22064	Bushing, safety arm	1
40	22091	Twist knob pulse 0-I	1
50	10384	Seal washer V-10A	1
60	14131	Screw MFX-H M4X16	2
70	15769	Safety micro switch	1
80	22085	Wire harness AWG compl.	1
90	15468	Selecting switch CA20, US	1
100	15822	Contactor BF2510A110	1
101	15820	Contactor BF0910A230	1
110	15110	RC-circuit 230v	1
110	15111	RC-circuit 110v	1
120	14332	Screw MRX M4X10 A2 70 PH	5
130	22456	Pressure spring	1
140	22493	Pin	1
150	14771	Screw RXK-H ST 4,2X9,5 FZB	1
160	22150	Brake device	1
170	22063	Sleeve	2
180	14336	Screw MRT M4X25 A2 70 T20	1
190	14754	Screw RX-TP 6-19X20 FZB	1
200	22046	Cam knob	1
210	10451	Sealwash 20X30X5 TRA200200	1
215	10450	Seal washer BAUD2SL 25X35X7	1
216	10262	Seal ring V-18S	1
220	22231	Top cover compl.	1
230	22488	Buffer	3
240	14084	Lock washer FBB 4.1 A2	3
250	15381	Cable ret PR 22.5 dia 15	1
260	22203	Supply cord AWG 12 1 PHA 110 v	1
260	15147	Supply cord CB RG-100/200/250/350/61/41	1
270	15384	Fuse T100MA	1
280	15385	Fuse holder	1
290	10373	Pre load washer 46X38X0,4	1
300	10420	Ball bearing 6005-2RS1	1
311	15742	Stator VCB/HCM61 110-120 1 60	1
311	15743	Stator VCM-41/VCB-61 220-240 1 50/60	1
312	15736	Rotor VCB-61 1100W 1500RPM	1
320	10255	Ball bearing 6203-2RS	1
330	22215	Motor shield Leroy H50	1
340	22457	Draw spring	1
350	14085	Lock washer FBB 5,1 A2	8
360	22143	Screw, motor M5X192	4
370	22136	Machine housing compl.	1
380	22138	Protection plate	1
390	22054	Screw, housing M5X175	4
400	14004	Nut M6M M4 A2 70	4
410	10494	Rubber foot F-107 B	4
420	14424	Screw LKCSF M4X12 A2 70	4
430	22472	Scraper handle	1
440	22446	Plug, rubber	1
450	22435	Lid	1
460	22438	Seal, lid	1
470	22439	Scraper blade	4
480	22436	Scraper	1

Vertical Cutter Blender VCB-61

No. on drawing	Item No.	Description	Pcs
490	22502	Knife unit	1
500	22451	Bowl 6L	1
510	22487	Rotary stop	1
520	14604	Screw MFS M3X16 A4	2
530	15282	Starting relay, 2000V	1
530	15283	STARTING RELAY, 100V	1
550	15287	CAPACITOR 400 MF, 125V	1
550	15290	Capacitor 150MF, 260V 230V	1
551	15288	CAPACITOR 40 MF, 400V	1
600	22504	Knife head	1
610	22505	Knife support	1
620	22506	Spacer	1
630	22507	Knife, turning	1
640	22508	Knife, serrated, middle	1
650	22509	Knife, serrated, low	1
660	14152	Screw MFS M5X25	4
670	14154	Screw MFS M5X35	4
680	22494	Lid incl. seal ring	1
690	22495	Scraper incl. wiper blades	1
700	22496	Wiper blades and seal ring	1
710	22691	Kit time relay	1

Vertical Cutter Blender VCB-62

No. on drawing	Item No.	Description	Pcs
10	22133	Safety arm	1
20	22068	Magnetic switch HM-17	1
30	22486	Bushing, safety arm, upper	1
35	22064	Bushing, safety arm	1
40	22092	Twist knob pulse 0-I-II	1
50	10384	Seal washer V-10A	1
60	14131	Screw MFX-H M4X16	2
70	15769	Safety micro switch	1
80	22187	Wire harness AWG 3 phase	1
90	15467	Selecting switch CA10, US	1
102	15810	Contactor 11BG0610A230	1
102	15818	Contactor 11BG0610A400	1
110	15110	RC-circuit 230v	1
120	14332	Screw MRX M4X10 A2 70 PH	5
130	22456	Pressure spring	1
140	22493	Pin	1
150	14771	Screw RXK-H ST 4,2X9,5 FZB	1
160	22150	Brake device	1
170	22063	Sleeve	2
180	14336	Screw MRT M4X25 A2 70 T20	2
190	14754	Screw RX-TP 6-19X20 FZB	1
200	22046	Cam knob	1
210	10451	Sealwash 20X30X5 TRA200200	1
215	10450	Seal washer BAUD2SL 25X35X7	1
216	10262	Seal ring V-18S	1
220	22231	Top cover compl.	1
230	22488	Buffer	3
240	14084	Lock washer FBB 4.1 A2	3
250	15381	Cable ret PR 22.5 dia 15	1
260	15142	Supply cord CB 3 phse	1

Vertical Cutter Blender VCB-62

No. on drawing	Item No.	Description	Pcs
270	15384	Fuse T100MA	1
280	15385	Fuse holder	1
290	10373	Pre load washer 46X38X0,4	1
300	10420	Ball bearing 6005-2RS1	1
311	15744	Stator VCM62 220-240 3 50/60	1
311	15745	Stator VCM62 380-415 3 50/60	1
312	15733	Rotor VCB-62 1500/900W	1
320	10255	Ball bearing 6203-2RS	1
330	22215	Motor shield Leroy H50	1
340	22457	Draw spring	1
350	14085	Lock washer FBB 5,1 A2	8
360	22143	Screw, motor M5X192	4
370	22136	Machine housing compl.	1
380	22138	Protection plate	1
390	22142	Screw, M6S M5X201 A2	4
400	14004	Nut M6M M4 A2 70	4
410	10494	Rubber foot F-107 B	4
420	14424	Screw LKCSF M4X12 A2 70	4
430	22472	Scraper handle	1
440	22446	Plug, rubber	1
450	22435	Lid	1
460	22438	Seal, lid	1
470	22439	Scraper blade	4
480	22436	Scraper	1
490	22502	Knife unit	1
500	22451	Bowl 6L	1
510	22487	Rotary stop	1
520	14604	Screw MFS M3X16 A4	2
600	22504	Knife head	1
610	22505	Knife support	1
620	22506	Spacer	1
630	22507	Knife, turning	1
640	22508	Knife, serrated, middle	1
650	22509	Knife, serrated, low	1
660	14152	Screw MFS M5X25	4
670	14154	Screw MFS M5X35	4
680	22494	Lid incl. seal ring	1
690	22495	Scraper incl. wiper blades	1
700	22496	Wiper blades and seal ring	1
710	22692	Kit time relay	1

Combi Cutter CC-32S

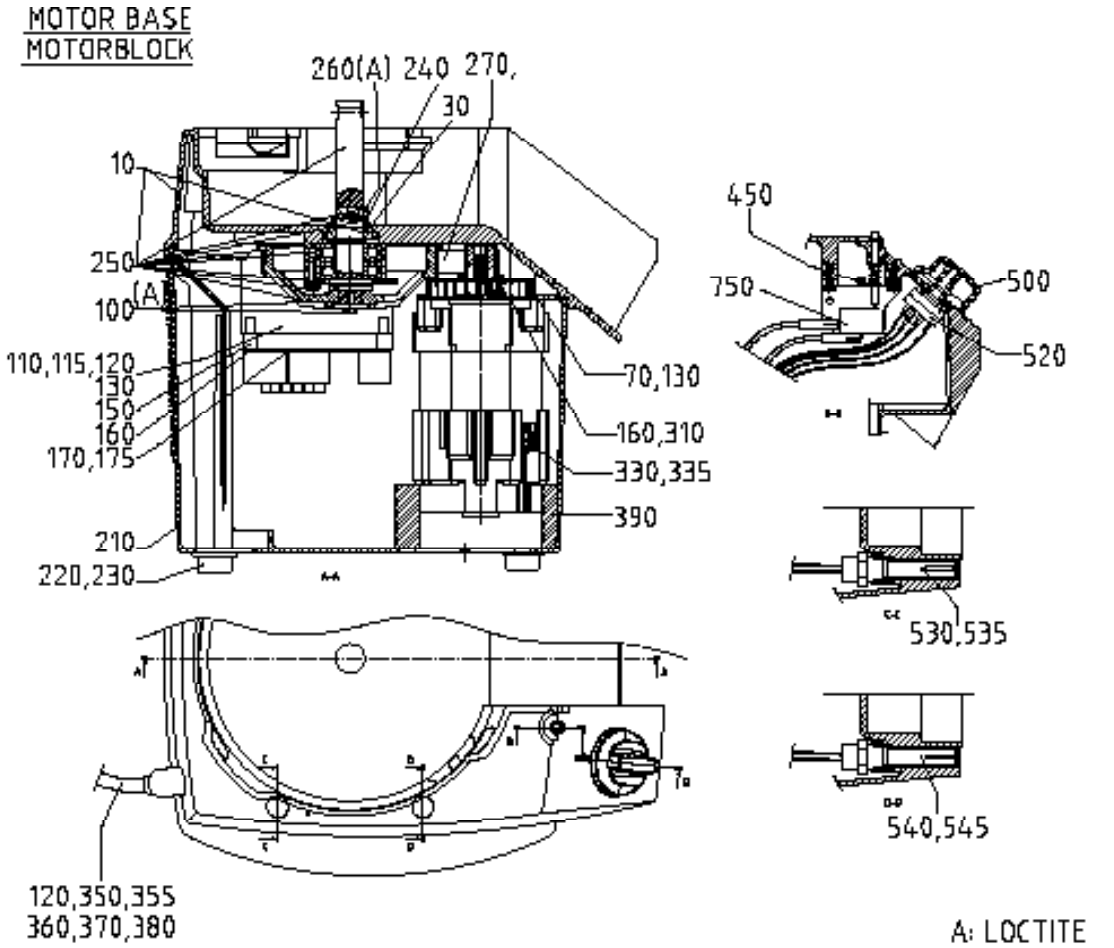

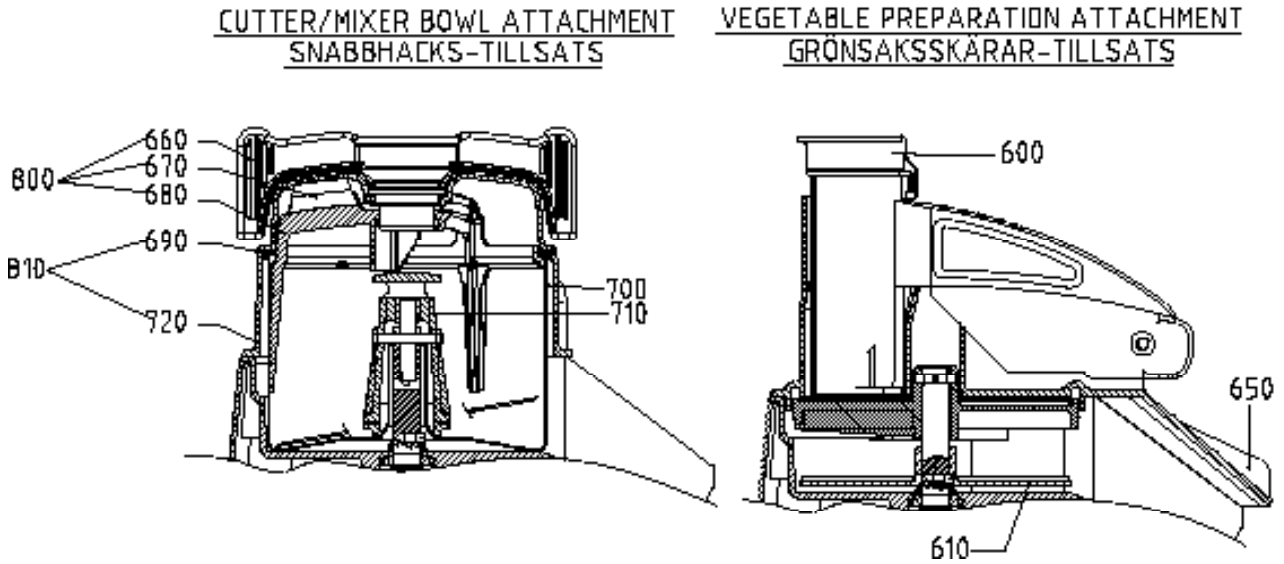

Combi Cutter CC-32S

No. on drawing	Item No.	Description	Pcs
10	1414	Housing, top inkl knife shaft	1
30	10259	Rubber seal washer 18X30X7	1
70	14344	Screw M5X12	4
100	1411	Pulley,knife shaft compl.	1
110	24293	El.-plate, AM	1
115	24268	El-plate, UL	1
120	14851	Screw MRT M4X10 A2	5
130	14084	Lock washer FBB 4.1 A2	1
150	15527	Bracket for PC-board AVC BS-9A	4
160	14753	Screw RTF-PT 5.0X20FZB	4
170	24343	PC-board CC 230 1 50	1
175	24370	PC-board CC 100-120 1 50/60	1
210	24340	Housing, base	1
220	10494	Rubber foot F-107 B	4
230	14333	Screw MRX M4X12 A2 70 PH	4
240	10263	Seal ring V-18A	1
250	1415	Knife shaft compl.	1
260	24146	Pin, knife shaft	1
270	10679	Belt GT 3MR 0408 18	1
310	24292	Bracket, motor AM	1
330	15711	Motor 220-240 1 50/60	1
335	15775	Kit Motor 110V CC-34, VCB-32, RG-50	1
350	15149	Supply cord CB 1 phase CC-34/VCB-32/RG-50	1
355	24211	Supply cord 120v US	1
360	10589	Strain relief clamp 55-016-89	1
370	14336	Screw MRT M4X25 A2 70 T20	2
380	15422	Cable support NK-5N	1
390	24296	Seal ring, fan	1
450	1413	Activator pin, safety switch	1
500	24222	Knob 0-1 w. blade spring	1
520	24295	Rotary switch, CC-32-1	1
530	24278	Magnetic switch,safety	1
535	24332	Magnetic switch, safety AM UL	1
540	24274	Magnetic switch, speed control	1
545	24333	Magnetic switch, speed control	1
600	24157	Pestle	1
610	83032	Ejector plate	1
650	24634	Feed head	1
660	24134	Scraper handle	1
670	24132	Scraper blade	3
680	24135	Scraper ring	1
690	24133	Seal ring dia.5	1
700	24151	Bowl 3L	1
710	24153	Knife unit	1
720	24172	Lid	1
750	24335	Micro switch unit compl AM UL	1
800	24244	Scraper assy	1
810	24245	Lid incl. seal ring	1

Combi Cutter CC-34

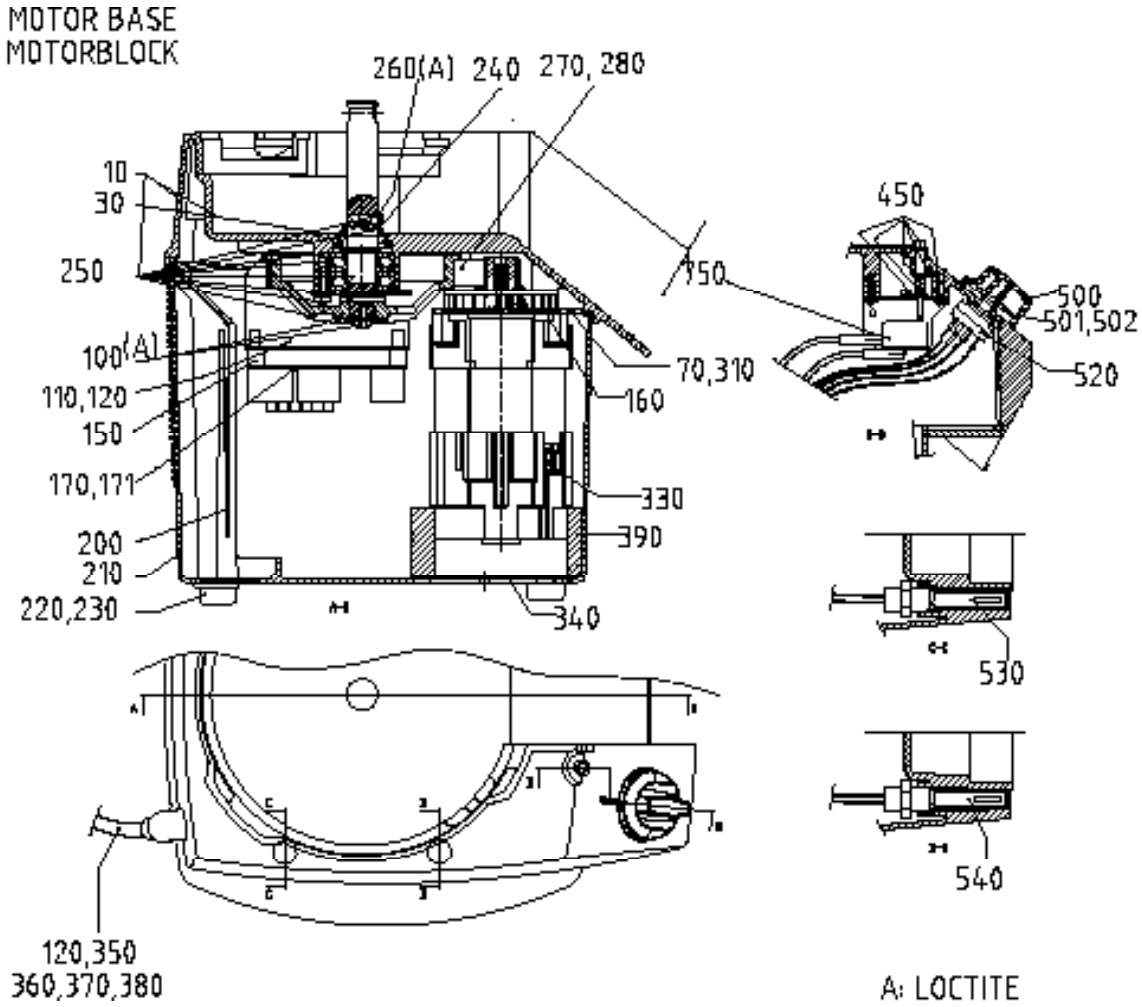

CUTTER/MIXER BOWL ATTACHMENT
SNABBHACKS-TILLSATS

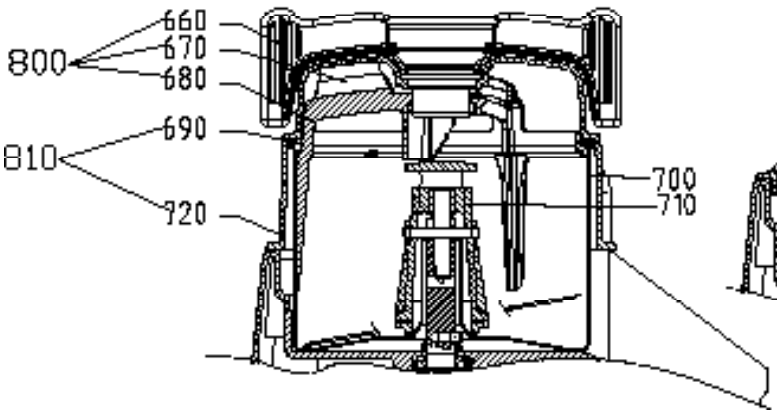

VEGETABLE PREPARATION ATTACHMENT
GRÖNSAKSSKÄRAR-TILLSATS

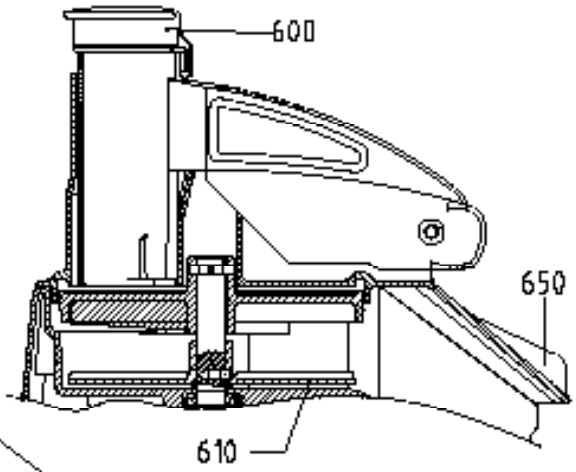

Combi Cutter CC-34

No. on drawing	Item No.	Description	Pcs
10	1412	Housing, top inkl knife shaft	1
30	10259	Rubber seal washer 18X30X7	1
70	14344	Screw M5X12	4
100	1411	Pulley,knife shaft compl.	1
110	24293	El.-plate, AM	1
120	14851	Screw MRT M4X10 A2	5
150	15527	Bracket for PC-board AVC BS-9A	4
160	14753	Screw RTF-PT 5.0X20FZB	4
170	24343	PC-board CC 230 1 50	1
171	24370	PC-board CC 100-120 1 50/60	1
200	24176	Protection plate	1
210	24340	Housing, base	1
220	10494	Rubber foot F-107 B	4
230	14333	Screw MRX M4X12 A2 70 PH	4
240	10263	Seal ring V-18A	1
250	1415	Knife shaft compl.	1
260	24146	Pin, knife shaft	1
270	10679	Belt GT 3MR 0408 18	1
280	24291	Pulley wheel	1
310	24292	Bracket, motor AM	1
330	15711	Motor 220-240 1 50/60	1
340	24300	Net	1
350	15149	Supply cord CB 1 phase CC-34/VCB-32/RG-50	1
360	10589	Strain relief clamp 55-016-89	1
370	14336	Screw MRT M4X25 A2 70 T20	2
380	15422	Cable support NK-5N	1
390	24296	Seal ring, fan	1
450	1413	Activator pin, safety switch	1
500	24152	Knob,speed cont with spring	1
501	24388	Turn stop	1
502	14502	Screw MC6S M4X8 A4 70	1
520	24294	Rotary switch, CC-34-1	1
530	24278	Magnetic switch,safety	1
540	24274	Magnetic switch, speed control	1
600	24157	Pestle	1
610	83032	Ejector plate	1
650	24634	Feed head	1
660	24134	Scraper handle	1
670	24132	Scraper blade	3
680	24135	Scraper ring	1
690	24133	Seal ring dia.5	1
700	24151	Bowl 3L	1
710	24153	Knife unit	1
720	24172	Lid	1
750	24335	Micro switch unit compl AM UL	1
800	24244	Scraper assy	1
810	24245	Lid incl. seal ring	1

Vegetable Preparation Machine RG-50

MOTOR BASE
MOTORBLOCK

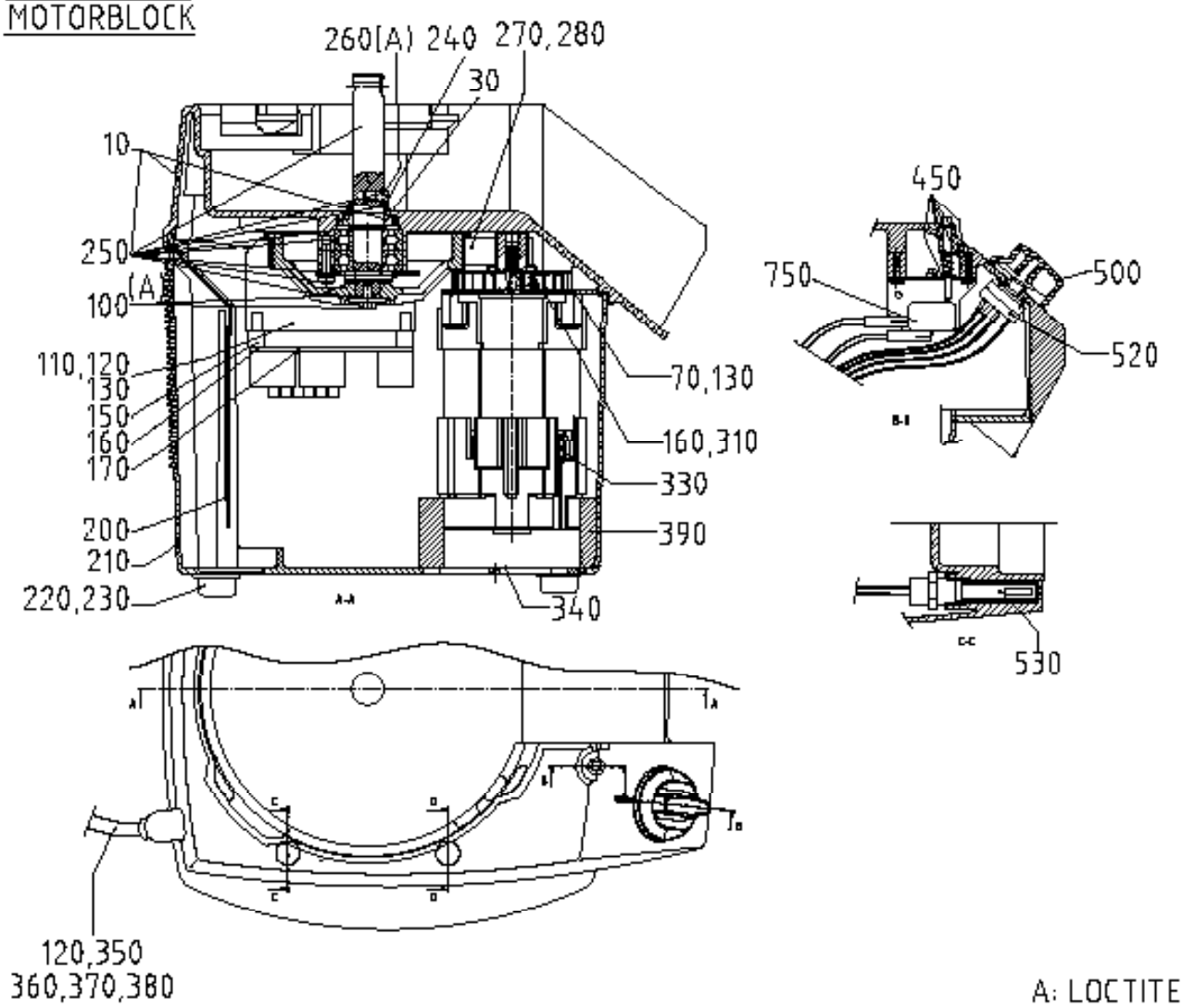

VEGETABLE PREPARATION ATTACHMENT
GRÖNSAKSSKÄRAR-TILLSATS

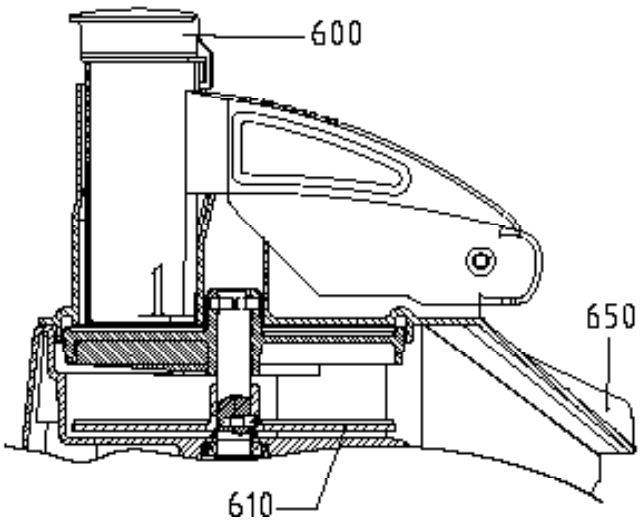

Vegetable Preparation Machine RG-50

No. on drawing	Item No.	Description	Pcs
10	1412	Housing, top inkl knife shaft	1
30	10259	Rubber seal washer 18X30X7	1
70	14344	Screw M5X12	4
100	1411	Pulley,knife shaft compl.	1
110	24293	El.-plate, AM	1
120	14851	Screw MRT M4X10 A2	5
130	14084	Lock washer FBB 4.1 A2	1
150	15527	Bracket for PC-board AVC BS-9A	4
160	14753	Screw RTF-PT 5.0X20FZB	4
170	24343	PC-board CC 230 1 50	1
200	24176	Protection plate	1
210	24340	Housing, base	1
220	10494	Rubber foot F-107 B	4
230	14333	Screw MRX M4X12 A2 70 PH	4
240	10263	Seal ring V-18A	1
250	1415	Knife shaft compl.	1
260	24146	Pin, knife shaft	1
270	10679	Belt GT 3MR 0408 18	1
280	24291	Pulley wheel	1
310	24292	Bracket, motor AM	1
330	15711	Motor 220-240 1 50/60	1
340	24300	Net	1
350	15149	Supply cord CB 1 phase CC-34/VCB-32/RG-50	1
360	10589	Strain relief clamp 55-016-89	1
370	14336	Screw MRT M4X25 A2 70 T20	2
380	15422	Cable support NK-5N	1
390	24296	Seal ring, fan	1
450	1413	Activator pin, safety switch	1
500	24222	Knob 0-1 w. blade spring	1
520	24295	Rotary switch, CC-32-1	1
530	24278	Magnetic switch,safety	1
600	24157	Pestle	1
610	83032	Ejector plate	1
650	24634	Feed head	1
750	24335	Micro switch unit compl AM UL	1

Vegetable Preparation Machine RG-50S

MOTOR BASE
MOTORBLOCK

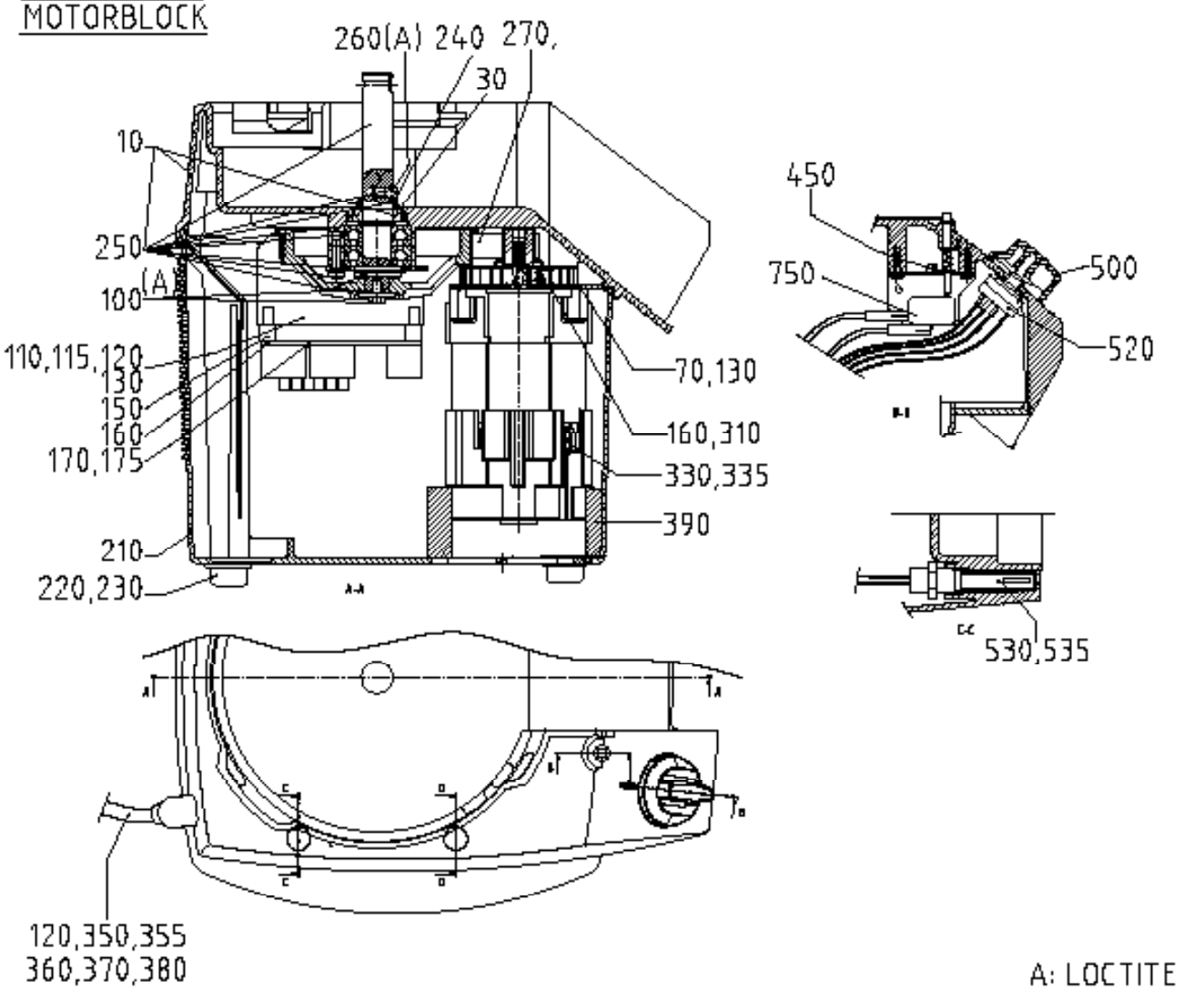

VEGETABLE PREPARATION ATTACHMENT
GRÖNSAKSSKÄRAR-TILLSATS

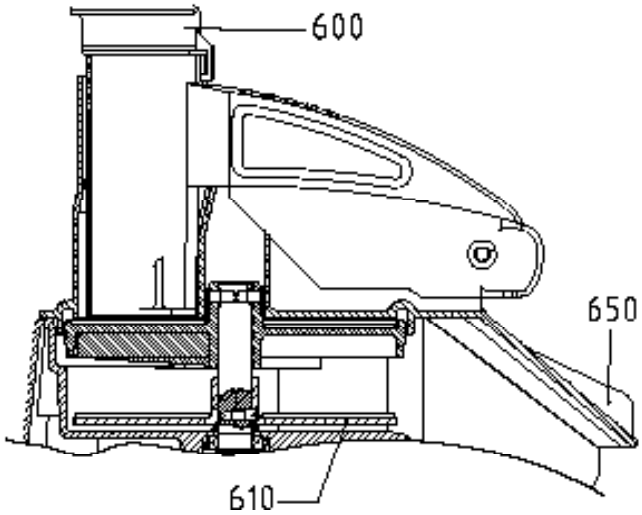

Vegetable Preparation Machine RG-50S

No. on drawing	Item No.	Description	Pcs
10	1414	Housing, top inkl knife shaft	1
30	10259	Rubber seal washer 18X30X7	1
70	14344	Screw M5X12	4
100	1411	Pulley,knife shaft compl.	1
110	24293	El.-plate, AM	1
115	24268	El-plate, UL	1
120	14851	Screw MRT M4X10 A2	5
130	14084	Lock washer FBB 4.1 A2	1
150	15527	Bracket for PC-board AVC BS-9A	4
160	14753	Screw RTF-PT 5.0X20FZB	4
170	24343	PC-board CC 230 1 50	1
175	24370	PC-board CC 100-120 1 50/60	1
210	24340	Housing, base	1
220	10494	Rubber foot F-107 B	4
230	14333	Screw MRX M4X12 A2 70 PH	4
240	10263	Seal ring V-18A	1
250	1415	Knife shaft compl.	1
260	24146	Pin, knife shaft	1
270	10679	Belt GT 3MR 0408 18	1
310	24292	Bracket, motor AM	1
330	15711	Motor 220-240 1 50/60	1
335	15775	Kit Motor 110V CC-34, VCB-32, RG-50	1
350	15149	Supply cord CB 1 phase CC-34/VCB-32/RG-50	1
355	24211	Supply cord 120v US	1
360	10589	Strain relief clamp 55-016-89	1
370	14336	Screw MRT M4X25 A2 70 T20	2
380	15422	Cable support NK-5N	1
390	24296	Seal ring, fan	1
450	1413	Activator pin, safety switch	1
500	24222	Knob 0-1 w. blade spring	1
520	24295	Rotary switch, CC-32-1	1
530	24278	Magnetic switch,safety	1
535	24332	Magnetic switch, safety AM UL	1
600	24157	Pestle	1
610	83032	Ejector plate	1
650	24634	Feed head	1
750	24335	Micro switch unit compl AM UL	1

Vegetable Preparation Machine RG-100

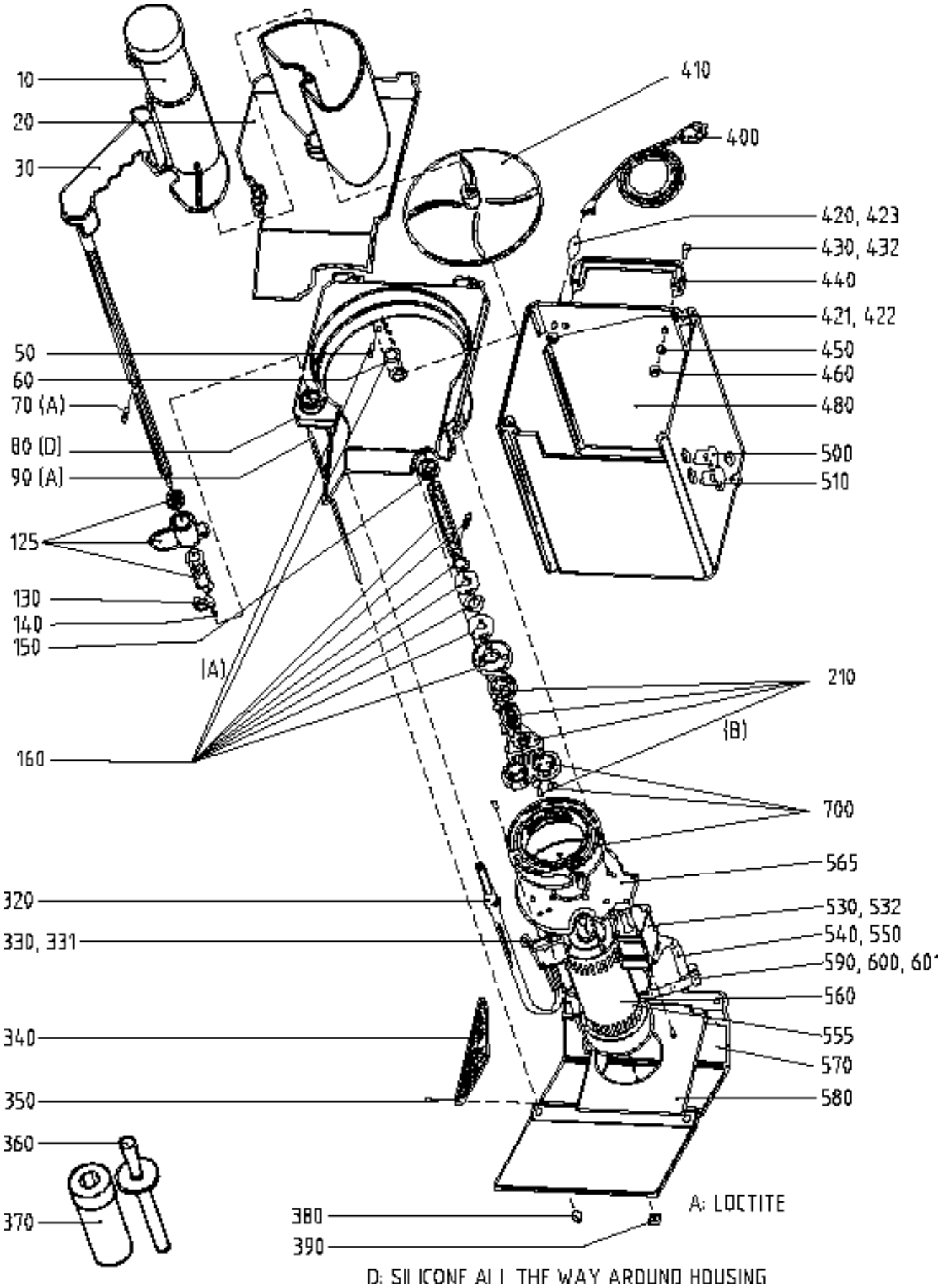

Vegetable Preparation Machine RG-100

No. on drawing	Item No.	Description	Pcs
10	83038	Pestle	1
20	1165	Feed cylinder compl.	1
30	1309	Feeder plate compl. incl shaft	1
50	1054	Pin	1
60	10262	Seal ring V-18S	1
70	1290	Guide pin	1
80	1400	Knife chamber RG-100/200	1
90	1039	Screw L=316	4
125	1091	Locking handle compl.	1
130	14305	Activator compl.	1
140	10275	Locking washer RS 4	1
150	10259	Rubber seal washer 18X30X7	1
160	1401	Knife shaft kompl RG100.	1
210	1403	Brake kompl. RG-100/200/250.	1
320	15354	Magnetic switch HM-S-16	1
330	1101	Microswitch unit compl. CE	1
331	1584	Micro switch unit	1
340	1096	Louver kit	1
350	14248	Screw KFXS ST3,5X9,5 A2 70	6
360	81066	Pestle	1
370	1155	Tube	1
380	1267	Nut,domed head M5	4
390	10273	Rubber foot SJ 5023 black	4
400	15147	Supply cord CB RG-100/200/250/350/61/41	1
400	15142	Supply cord CB 3 phse	1
400	15278	Supply cord 439/2.4MG SJT	1
400	15377	Supply cord BS/2.5MS UK	1
410	83032	Ejector plate	1
420	15623	Cable ret. PR 18,5 metal dia12	1
421	15627	Nut PG11	1
422	15692	Nut PG 9 plastic	1
423	15688	Cable retainer, PG9 (8)	1
430	14374	Screw MCS M8X20 A2 70	2
432	10306	Plug	2
440	10043	Handle M443/140 8-N-CH	1
450	14088	Lock washer FBB 8.2 A2	2
460	14008	Nut M6M M8 A2 70	2
480	1093	MACHINE HOUSING COMPL	1
500	15657	Push button o compl.	1
510	15440	Push button 1 complete	1
530	15813	Contactor 11BG0910A110	1
532	15810	Contactor 11BG0610A230	1
540	1056	Cablage AWG18	1
550	15384	Fuse T100MA	1
555	15293	Capacitor 110-120 1 60	1
555	15292	CAPACITOR 220-240 1 50/60	1
560	15754	Motor RG-100, 240 1 50	1
560	15752	Motor RG-100, 400 3 50	1
560	15753	Motor 110-120 1 60	1
565	22232	MOTOR BRACKET	1
570	1249	Base plate RG-200/100 compl.	1
580	22222	Ventilation plate RG-100/200	1
590	15111	RC-circuit 110v	1
600	15110	RC-circuit 230v	1
601	15385	Fuse holder	1
700	1098	Planetwheels and gearing kit	1

Vegetable Preparation Machine RG-200

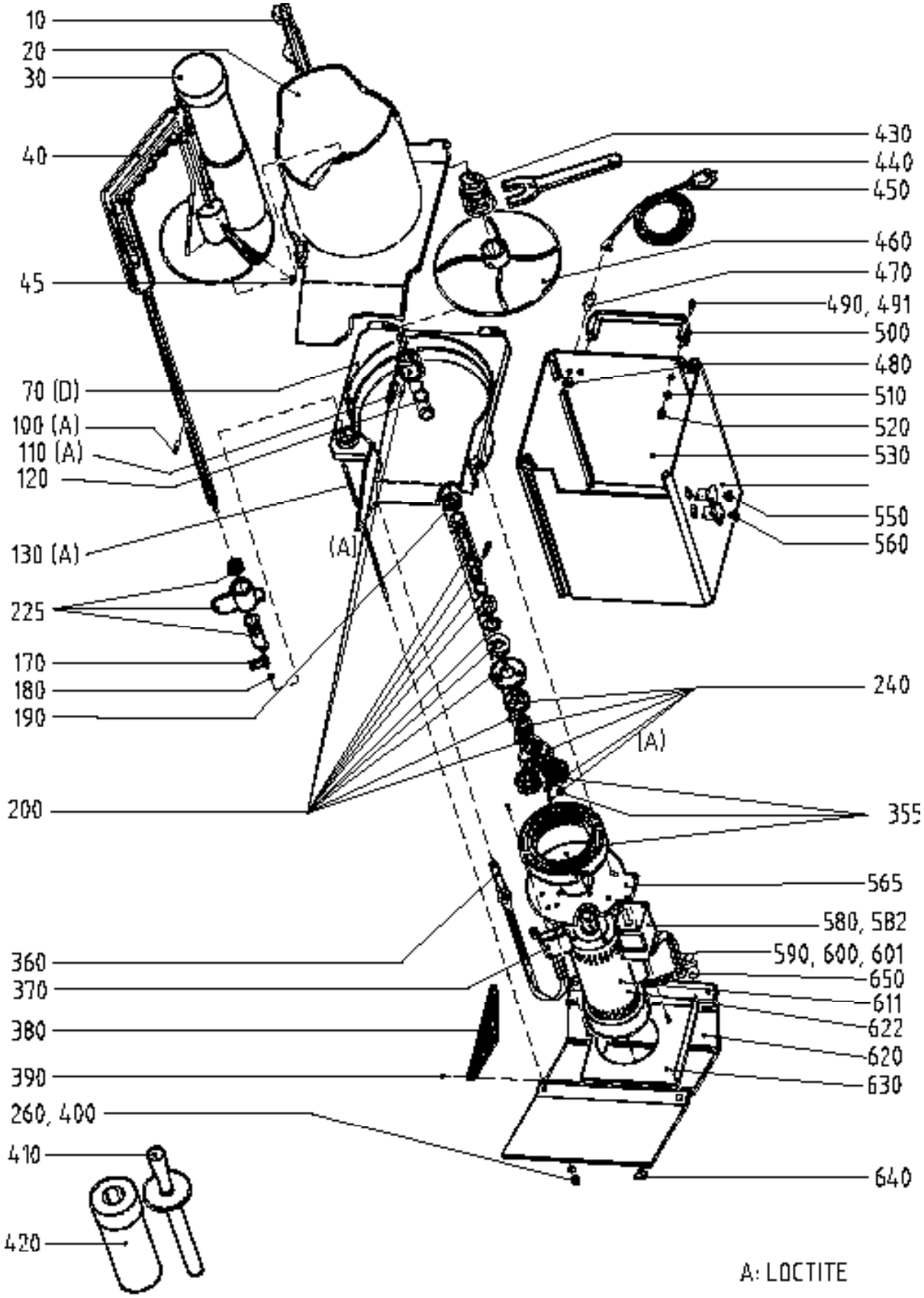

Vegetable Preparation Machine RG-200

No. on drawing	Item No.	Description	Pcs
10	1171	Partition wall compl.	1
20	1188	Feed cylinder compl.	1
30	83038	Pestle	1
40	1180	Feeder plate compl. incl shaft	1
45	40839	Slide knob	1
70	1407	Knife chamber RG-200	1
100	1290	Guide pin	1
110	3152	Carrier pin for ejector plate	2
120	10262	Seal ring V-18S	1
130	1039	Screw L=316	4
170	1073	Activator CE/ STD	1
180	10275	Locking washer RS 4	1
190	10259	Rubber seal washer 18X30X7	1
200	1402	Knife shaft kompl RG-200/ RG-250	1
225	1091	Locking handle compl.	1
240	1403	Brake kompl. RG-100/200/250.	1
260	14085	Lock washer FBB 5,1 A2	8
355	1098	Planetwheels and gearing kit	1
360	15354	Magnetic switch HM-S-16	1
370	1583	Micro switch unit	1
380	1096	Louver kit	1
390	14248	Screw KFXS ST3,5X9,5 A2 70	6
400	1267	Nut,domed head M5	4
410	81066	Pestle	1
420	1155	Tube	1
430	1172	Decoring device	1
440	1184	Wrench for decoring device	1
450	15278	Supply cord 439/2.4MG SJT	1
450	15377	Supply cord BS/2.5MS UK	1
450	15147	Supply cord CB RG-100/200/250/350/61/41	1
460	1159	Ejector plate	1
470	15688	Cable retainer, PG9 (8)	1
480	15692	Nut PG 9 plastic	1
490	14374	Screw MCS M8X20 A2 70	2
491	10306	Plug	2
500	10043	Handle M443/140 8-N-CH	1
510	14088	Lock washer FBB 8.2 A2	2
520	14008	Nut M6M M8 A2 70	2
530	1093	MACHINE HOUSING COMPL	1
550	15657	Push button o compl.	1
560	15440	Push button 1 complete	1
565	22232	MOTOR BRACKET	1
580	15813	Contactor 11BG0910A110	1
582	15810	Contactor 11BG0610A230	3
590	15384	Fuse T100MA	1
600	1056	Cablage AWG18	1
601	15385	Fuse holder	1
611	15754	Motor RG-100, 240 1 50	1
611	15755	Motor RG-200, 110/120 1 60	1
611	15752	Motor RG-100, 400 3 50	1
620	1095	Base plate compl.	1
622	15292	CAPACITOR 220-240 1 50/60	1
622	15293	Capacitor 110-120 1 60	1
630	1170	Fan plate	1
640	10273	Rubber foot SJ 5023 black	4
650	15111	RC-circuit 110v	1
650	15110	RC-circuit 230v	1

Vegetable Preparation Machine RG-250 diwash

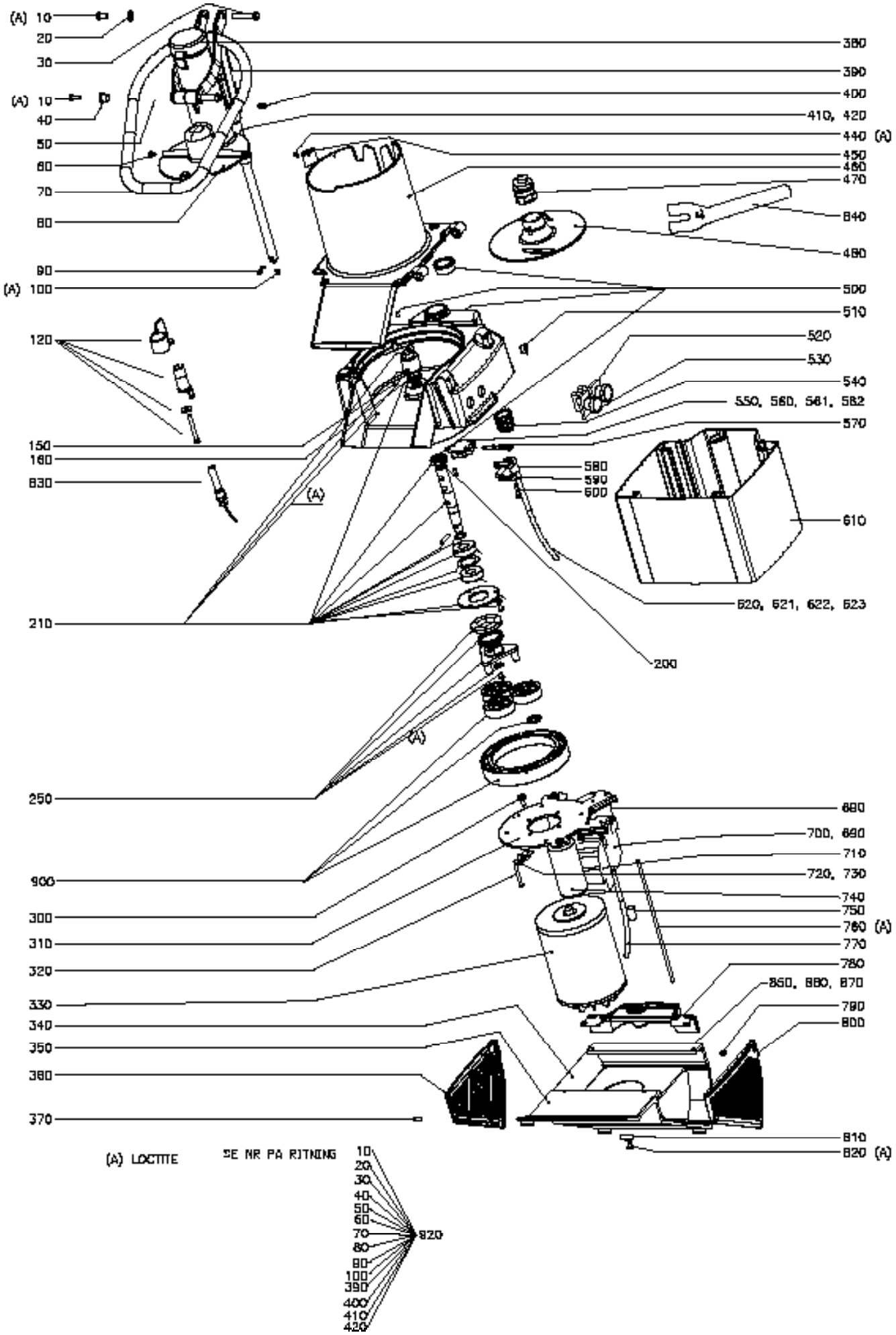

Vegetable Preparation Machine RG-250 diwash

No. on drawing	Item No.	Description	Pcs
10	25190	Screw	2
20	10642	Washer, plasitc 18/10,5X1,5	2
30	25162	Shaft L=45	1
40	25181	Bushing 19/14-10,2	2
50	25189	Shaft L=56	1
60	25279	Slide knob dia. 10X4	3
70	25155	Pusher handle	1
80	25265	Feeder plate incl. shaft diwash	1
90	25159	Pin, 6MM	1
100	14833	Lock screw	1
120	25267	Locking handle compl. diwash.	1
150	3152	Carrier pin for ejector plate	2
160	10262	Seal ring V-18S	1
200	10259	Rubber seal washer 18X30X7	1
210	1402	Knife shaft kompl RG-200/ RG-250	1
250	1403	Brake kompl. RG-100/200/250.	1
300	14521	Screw M6SH M6X12	4
310	25149	Plate, motor	1
320	14353	Screw MRT M5X40	4
330	15759	Motor 230/400 3 50, 440 60	1
330	15760	Motor 220-230 1 60	1
330	15757	Motor 110-120 1 50/60	1
340	22223	FAN PLATE	1
350	25140	Base	1
360	25146	Louver, left	1
370	14622	Screw RTK ST3.5X13 A2 70	6
380	25180	Pestle	1
390	25160	Link	1
400	25191	Screw for link system	2
410	25161	sleeve for link system	1
420	25182	Bushing 18-15,3	2
440	14223	Screw MKFS M4X 10 A2 70	1
450	25285	Support, piston	1
460	25346	Feed cylinder compl.DW	1
470	1172	Decoring device	1
480	25153	Ejector plate	1
500	25268	Knife housing unit diwash	1
510	10455	Plug IKPT 1715S	1
520	15657	Push button o compl.	1
530	15440	Push button 1 complete	1
540	25158	Guide bushing	1
550	25145	Safety switch compl. US	1
560	14851	Screw MRT M4X10 A2	2
561	15565	Micro switch XGT42C-86-S20Z1	1
562	23227	Insulating barrier for switch	1
570	25163	Activator pin compl.	1
580	15648	Sleeve 134-002 dia. 12/8	1
590	10589	Strain relief clamp 55-016-89	2
600	14336	Screw MRT M4X25 A2 70 T20	2
610	25137	Machine housing compl.	1
620	15142	Supply cord CB 3 phse	1
620	15147	Supply cord CB RG-100/200/250/350/61/41	1
620	15377	Supply cord BS/2.5MS UK	1
620	15208	Supply cord SJT3X14 AWG, US	1
690	15818	Contactor 11BG0610A400	2
690	15810	Contactor 11BG0610A230	2

Vegetable Preparation Machine RG-250 diwash

No. on drawing	Item No.	Description	Pcs
690	15813	Contactor 11BG0910A110	1
700	15815	Contactor BF1210A110	1
710	15821	Overload rel.RF381000V195	1
710	15811	Overload rel.RF120160	1
720	15385	Fuse holder	1
730	15384	Fuse T100MA	1
740	15665	CAPACITOR 60 MF, 120V	1
740	15489	Capasitor 16 MF, 220-240V	1
750	15110	RC-circuit 230v	1
750	15111	RC-circuit 110v	1
760	25136	Draw bar kit M5	1
770	25135	Wiring kit	1
780	25148	Handle	1
790	14046	Nut, locking LM M5 A2	4
800	25147	Louver, right	1
810	10507	Foot, rubber BVO 22H10	4
820	40786	Screw MSCS M4X10	4
830	15354	Magnetic switch HM-S-16	1
840	1184	Wrench for decoring device	1
850	10497	Bushing plastic 05-6-10-7.5	1
860	10498	Easher plastic 32-6	2
870	14465	Screw LKCSF M6X20 A2 70	1
900	1098	Planetwheels and gearing kit	1
920	25249	Feeder unit compl. diwash	1

Vegetable Preparation Machine RG-250

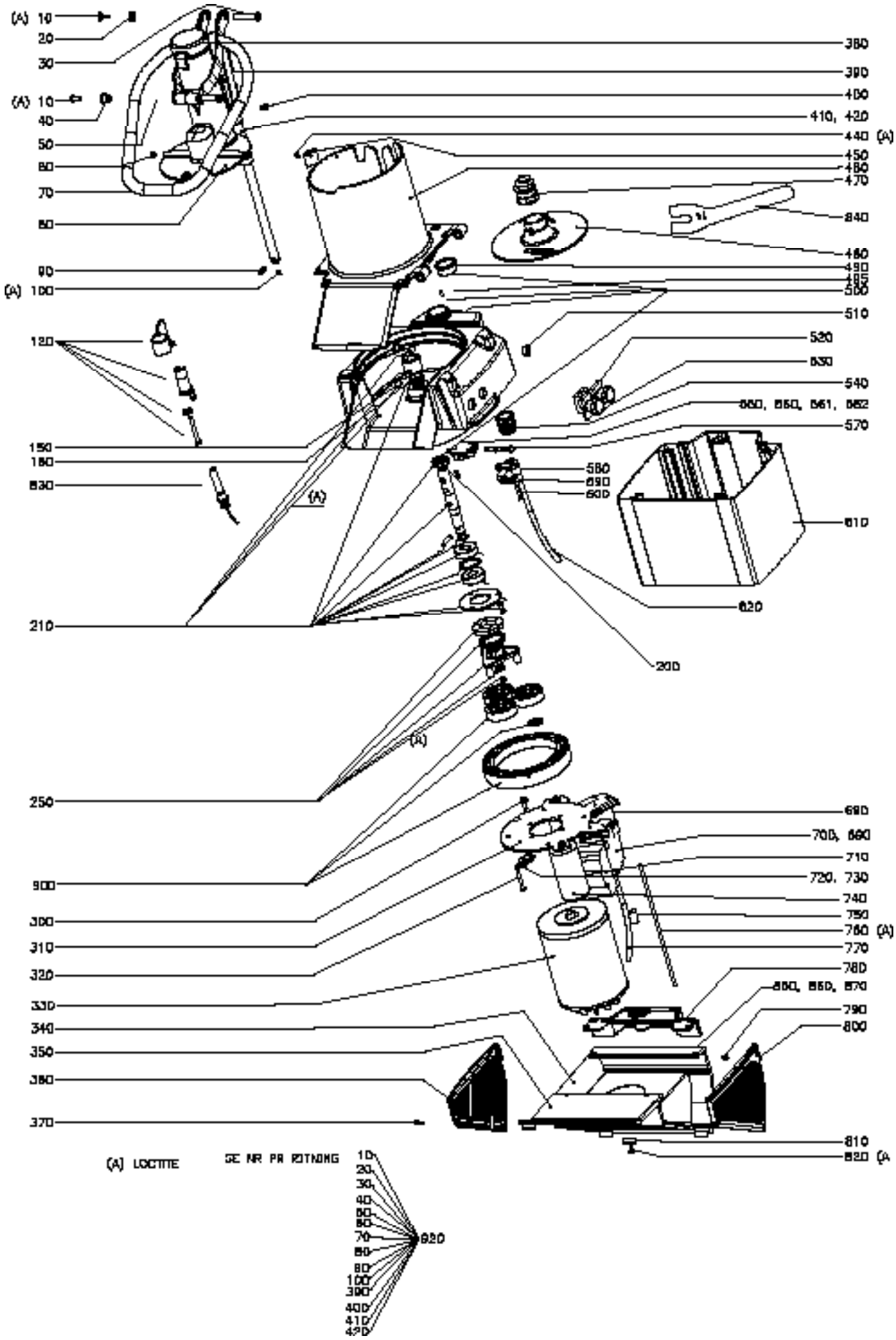

Vegetable Preparation Machine RG-250

No. on drawing	Item No.	Description	Pcs
10	25190	Screw	2
20	10642	Washer, plasitc 18/10,5X1,5	2
30	25162	Shaft L=45	1
40	25181	Bushing 19/14-10,2	2
50	25189	Shaft L=56	1
60	33305	Slide knob dia. 10X4	3
70	25155	Pusher handle	1
80	25102	Feeder plate incl. shaft	1
90	25159	Pin, 6MM	1
100	14833	Lock screw	1
120	1406	Locking handle kompl.	1
150	3152	Carrier pin for ejector plate	2
160	10262	Seal ring V-18S	1
200	10259	Rubber seal washer 18X30X7	1
210	1402	Knife shaft kompl RG-200/ RG-250	1
250	1403	Brake kompl. RG-100/200/250.	1
300	14521	Screw M6SH M6X12	4
310	25149	Plate, motor	1
320	14353	Screw MRT M5X40	4
330	15760	Motor 220-230 1 60	1
330	15757	Motor 110-120 1 50/60	1
330	15759	Motor 230/400 3 50, 440 60	1
340	22223	FAN PLATE	1
350	25140	Base	1
360	25146	Louver, left	1
370	14622	Screw RTK ST3.5X13 A2 70	6
380	25180	Pestle	1
390	25160	Link	1
400	25191	Screw for link system	2
410	25161	sleeve for link system	1
420	25182	Bushing 18-15,3	2
440	14223	Screw MKFS M4X 10 A2 70	1
450	25177	Support, piston	1
460	25106	Feed cylinder compl.	1
470	1172	Decoring device	1
480	25153	Ejector plate	1
490	25183	Bushing 37/33-26,4	1
495	14881	Rivet KDS 2X4,5	1
500	1404	Knife chamber RG-250	1
510	10455	Plug IKPT 1715S	1
520	15657	Push button o compl.	1
530	15440	Push button 1 complete	1
540	25158	Guide bushing	1
550	25145	Safety switch compl. US	1
560	14851	Screw MRT M4X10 A2	2
561	15565	Micro switch XGT42C-86-S20Z1	1
562	23227	Insulating barrier for switch	1
570	25163	Activator pin compl.	1
580	15648	Sleeve 134-002 dia. 12/8	1
590	10589	Strain relief clamp 55-016-89	2
600	14336	Screw MRT M4X25 A2 70 T20	2
610	25137	Machine housing compl.	1
620	15147	Supply cord CB RG-100/200/250/350/61/41	1
620	15142	Supply cord CB 3 phse	1
620	15377	Supply cord BS/2.5MS UK	1
620	15208	Supply cord SJT3X14 AWG, US	1

Vegetable Preparation Machine RG-250

No. on drawing	Item No.	Description	Pcs
690	15818	Contactor 11BG0610A400	2
690	15813	Contactor 11BG0910A110	1
690	15810	Contactor 11BG0610A230	2
700	15815	Contactor BF1210A110	1
710	15821	Overload rel.RF381000V195	1
710	15811	Overload rel.RF120160	1
720	15385	Fuse holder	1
730	15384	Fuse T100MA	1
740	15665	CAPACITOR 60 MF, 120V	1
740	15489	Capasitor 16 MF, 220-240V	1
750	15111	RC-circuit 110v	1
750	15110	RC-circuit 230v	1
760	25136	Draw bar kit M5	1
770	25135	Wiring kit	1
780	25148	Handle	1
790	14046	Nut, locking LM M5 A2	4
800	25147	Louver, right	1
810	10507	Foot, rubber BVO 22H10	4
820	40786	Screw MSCS M4X10	4
830	15354	Magnetic switch HM-S-16	1
840	1184	Wrench for decoring device	1
850	10497	Bushing plastic 05-6-10-7.5	1
860	10498	Easher plastic 32-6	2
870	14465	Screw LKCSF M6X20 A2 70	1
900	1098	Planetwheels and gearing kit	1
920	25103	Feeder unit compl.	1

Vegetable Preparation Machine RG-350

No. on drawing	Item No.	Description	Pcs
10	40548	Carrier pin	1
20	15783	Thrust sleeve	1
30	15784	Carrier pin for ejector plate	2
40	10311	Seal ring V-35S	1
50	40524	Locking handle complete	1
110	40540	Knife chamber	1
120	40629	Pin screw set	1
130	10444	Seal ring basl 35X52X10	1
140	15354	Magnetic switch HM-S-16	1
150	14086	Lock washer FBB 6.1 A2	4
160	14525	Screw M6S M6X20	4
170	15510	Start relay kit 230v	1

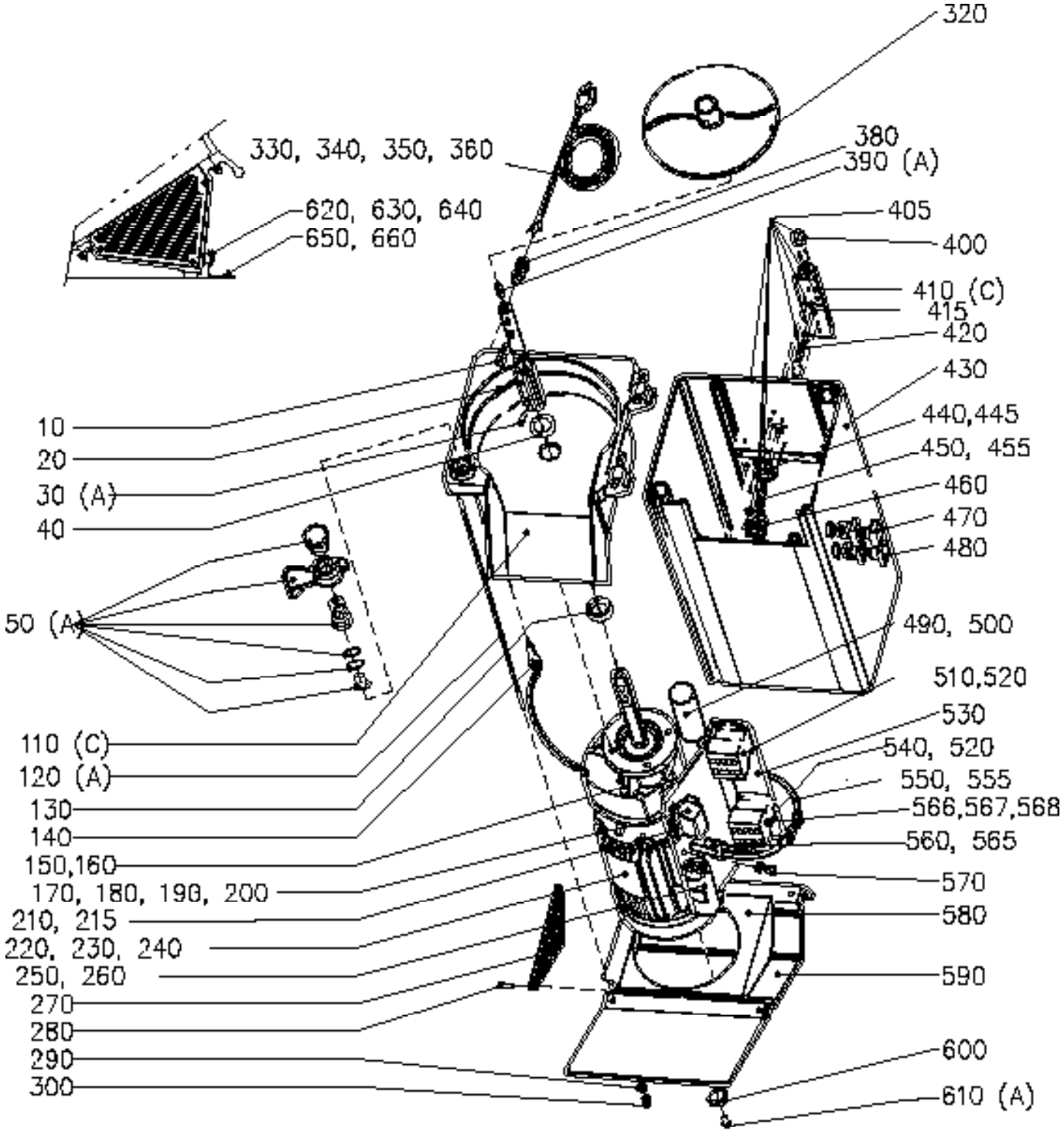

A: LOCTITE

C: SILICONE ALL THE WAY AROUND HOUSING

Vegetable Preparation Machine RG-350

No. on drawing	Item No.	Description	Pcs
180	40807	Start relay kit 230v	1
190	15503	Start relay no260 klixon 110v	1
200	40814	Start relay kit 110v	1
210	15384	Fuse T100MA	1
215	15385	Fuse holder	1
220	15780	Motor CB1701-4SB5 110-120 1 60	1
230	15781	Motor 220-240 1 50/60	1
240	15782	Motor CB1701-4SB5 400 3 50	1
250	15502	Capacitor, start 193MICROF 110v	1
260	15154	Kondensator	1
270	1096	Louver kit	1
280	14248	Screw KFXS ST3,5X9,5 A2 70	6
290	14085	Lock washer FBB 5,1 A2	6
300	1267	Nut,domed head M5	4
320	3086	Ejector plate	1
330	15147	Supply cord CB RG-100/200/250/350/61/41	1
340	15377	Supply cord BS/2.5MS UK	1
350	15208	Supply cord SJT3X14 AWG, US	1
360	15142	Supply cord CB 3 phse	1
380	15381	Cable ret PR 22.5 dia 15	2
380	15301	CABLE RETAIN.	2
390	14844	Locking screw PSS M8X 12 A2 70	1
400	40680	Bushing	2
405	40689	Rear bracket for shaft compl. RG-350	1
410	40637	Bracket incl screws	1
415	10500	Sealring 06X2.2 N70BN02F	2
420	40638	Activator pin short compl.	1
430	40567	Housing assembly compl.	1
440	40640	Microswitch unit single compl.	1
445	15481	Micro switch BVMF ULS	1
450	40639	Activator pin long compl.	1
455	10499	Spring SF-TFR 0,75-6-15	2
460	40641	Microswitch unit double compl.	1
470	15657	Push button o compl.	1
480	15440	Push button 1 complete	1
490	15501	Capasitor,run 80MICROF. 110v	1
500	15489	Capasitor 16 MF, 220-240V	1
510	15810	Contactor 11BG0610A230	2
520	15815	Contactor BF1210A110	1
530	40632	Panel incl. fasteners	1
540	15813	Contactor 11BG0910A110	1
550	40787	Wring loom, LS-relay	1
555	40800	Wiring loom 3-phase	1
560	15111	RC-circuit 110v	1
565	15110	RC-circuit 230v	1
566	15819	Overload relay RF381800V195	1
567	15816	Overload RF120630	1
568	15812	Overload relay RF381400V195	1
570	14339	Screw MRT M5X12 A4 T25	6
580	40547	Fan plate	1
590	40622	Base	1
600	10507	Foot, rubber BVO 22H10	4
610	40786	Screw MSCS M4X10	4
620	10497	Bushing plastic 05-6-10-7.5	1
630	10498	Easher plastic 32-6	2
640	14465	Screw LKCSF M6X20 A2 70	1
650	40780	Bracket	1
660	14990	Screw CSS ST4.8X25 A2	2

Vegetable Preparation Machine RG-350: Manual Feeder, Ergo-loop

No. on drawing	Item No.	Description	Pcs
10	14223	Screw MKFS M4X 10 A2 70	2
20	40628	Support plate	1
30	40627	Sliding washer	1
40	25162	Shaft L=45	1
45	25190	Screw	2
50	40844	Pusher shaft	1
55	40848	Bushing	2
60	40554	Pestle	1
70	40849	Nut L=12,5	1
80	40894	Pusher link	2
90	40575	Slide knob	3
100	40876	Pusher plate Ergo compl.	1
110	40845	Pusher handle ergo	1
120	40846	Bushing 20.4/25X30	1
125	40762	Bushing 25X13	1
130	1054	Pin	1
150	3129	Decoring device 3ph	1
155	40636	Decoring device 1ph compl.	1
160	40987	Feed cylinder compl. HALLDE	1
170	25191	Screw for link system	2
180	3162	Wrench	1
200	40869	Push feeder handle	1

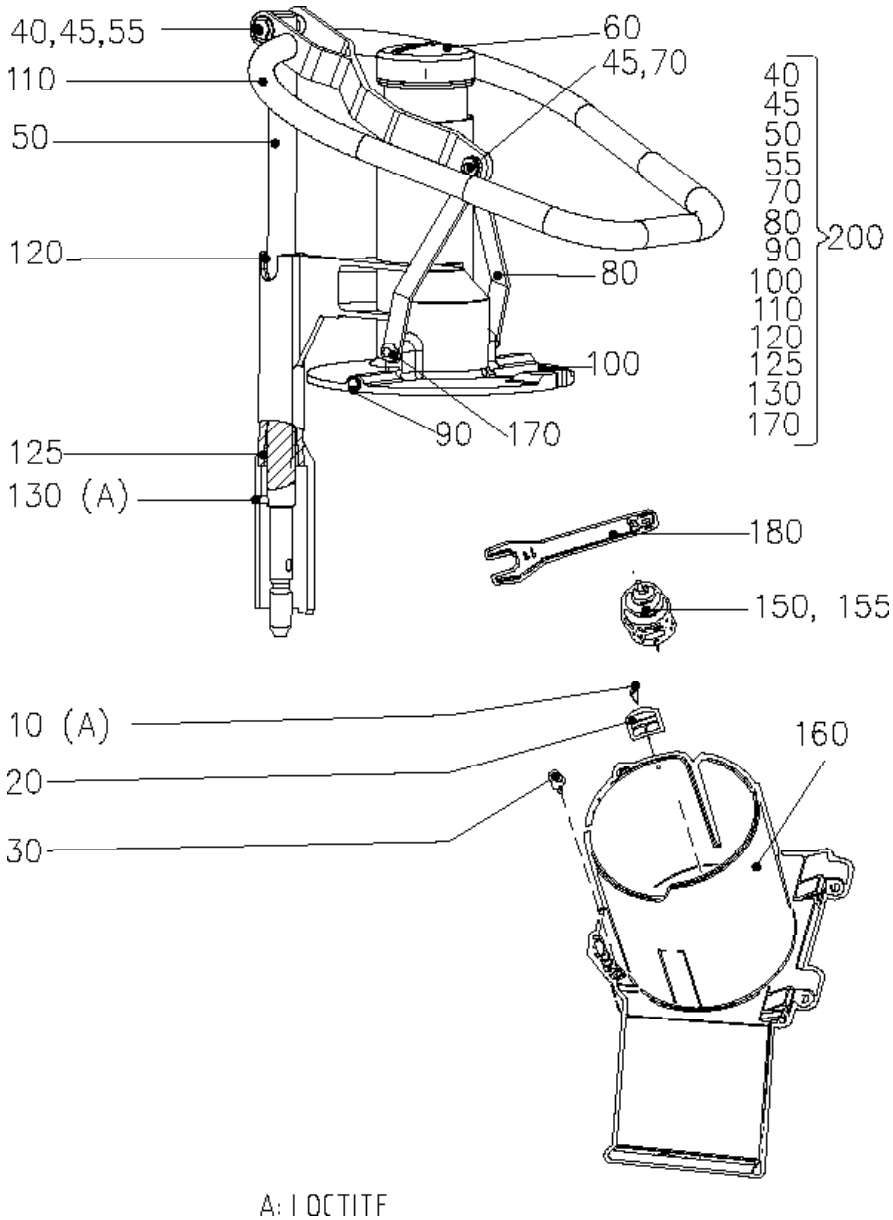

Vegetable Preparation Machine RG-350: Feed Hopper

No. on drawing	Item No.	Description	Pcs
20	40627	Sliding washer	1
70	10343	Handle I280/65-M8	1
80	3149	Stud screw	1
100	1054	Pin	1
110	40892	Sliding sleeve	1
120	40890	Locking shaft	1
130	40891	Stiring sleeve	1
160	3311	Agitator arm	1
170	40893	Stirer	1
180	14028	Nut MHM M8	1
200	3162	Wrench	1
210	10036	Lobe knob 25-M5	1
220	10281	Locking washer 12X21	1
230	10306	Plug	1

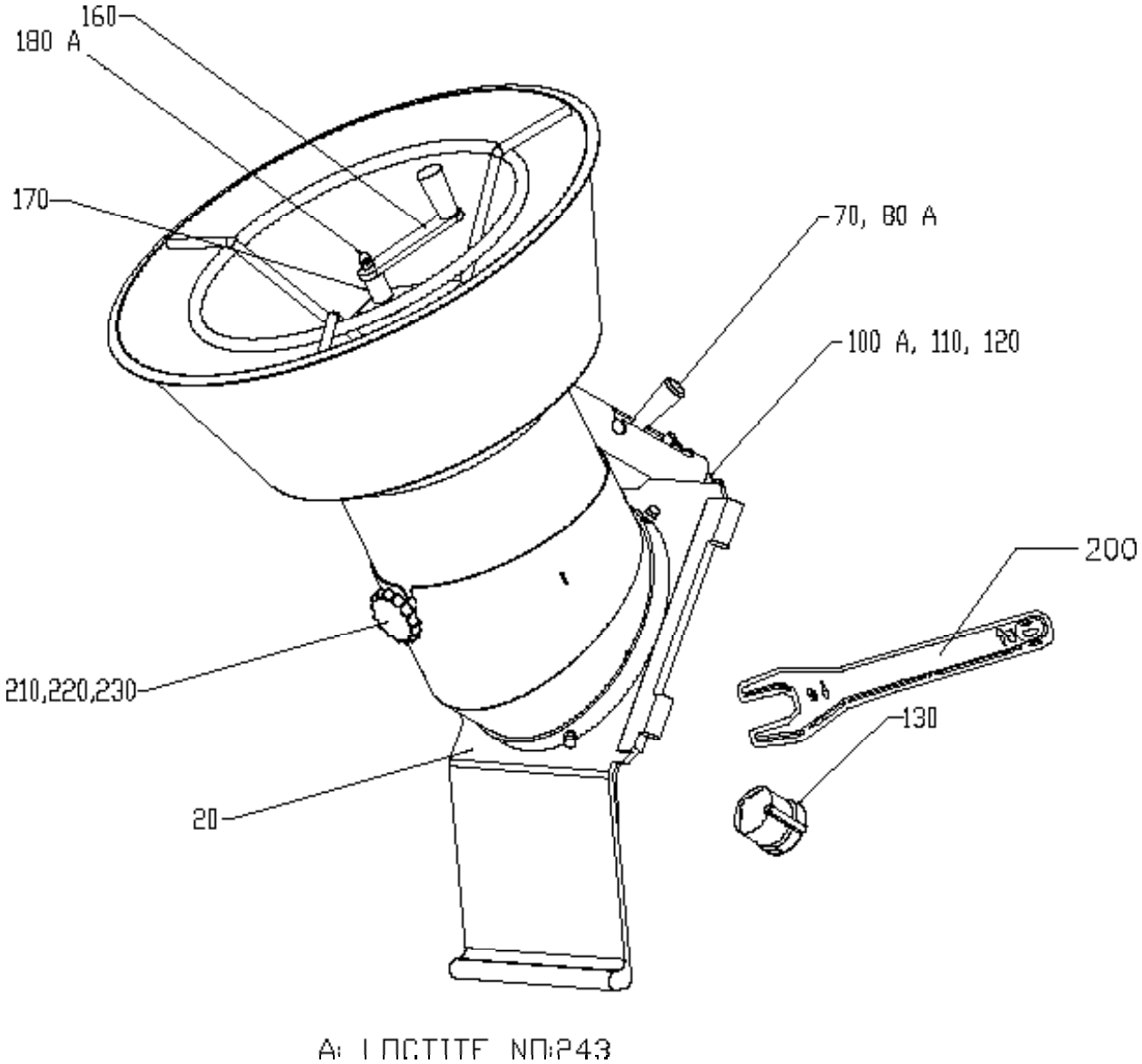

Vegetable Preparation Machine RG-300i

No. on drawing	Item No.	Description	Pcs
10	37042	Ejector plate	1
20	14800	Locking screw PSS M10X 12 A2 70	1
30	47548	Carrier pin	1
40	37059	Carrier pin for ejector plate	2
50	10311	Seal ring V-35S	1
60	47001	Knife chamber	1
70	47208	Magnetic switch HM-PR15.2	1
80	15692	Nut PG 9 plastic	1
100	14011	Screw MC6S M4x25	4
120	47207	Wiring loom machine	1
160	14084	Lock washer FBB 4.1 A2	6

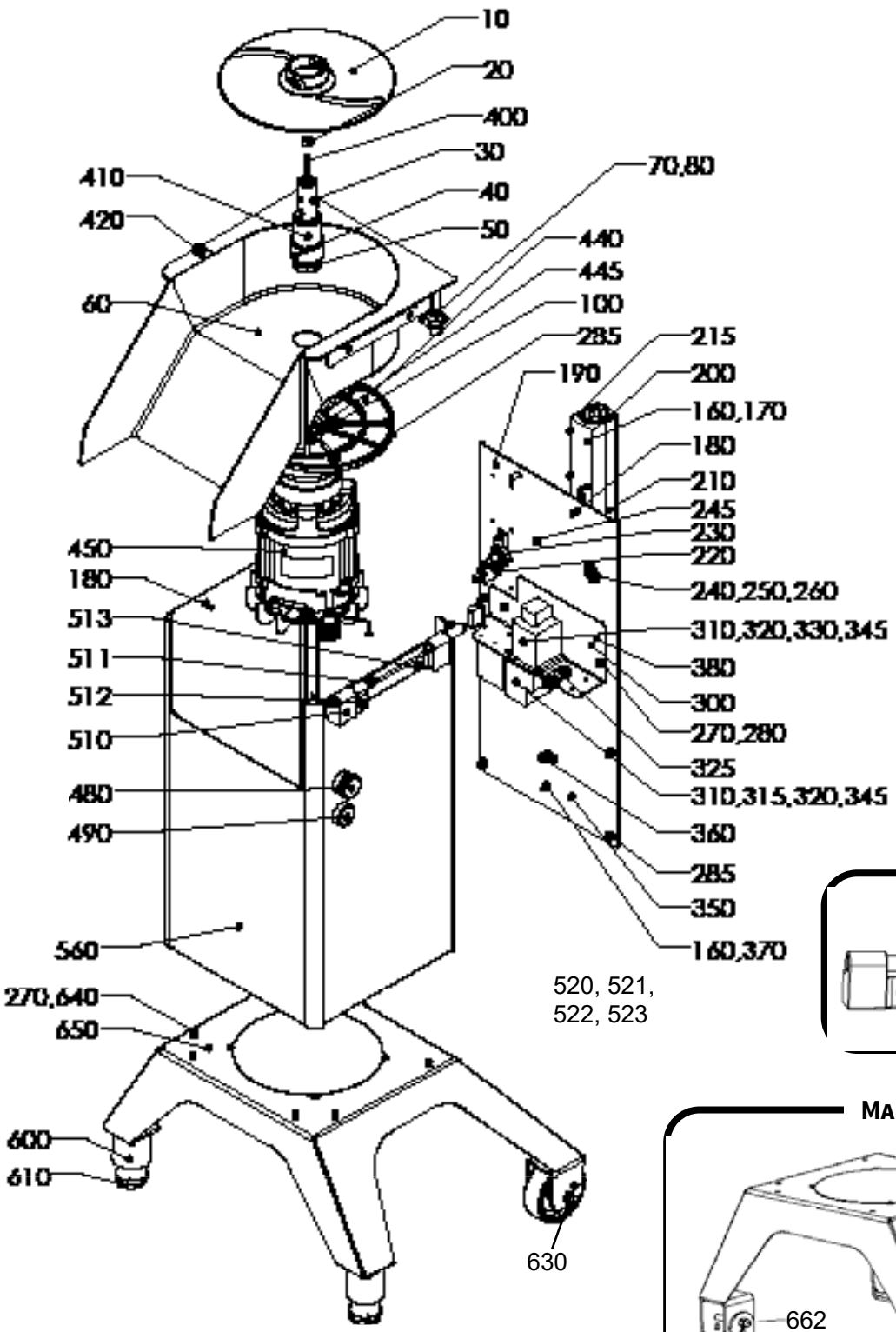

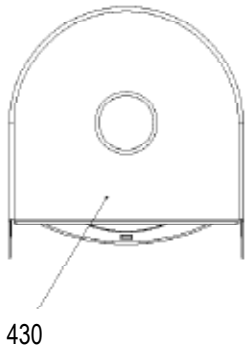

Marine Model

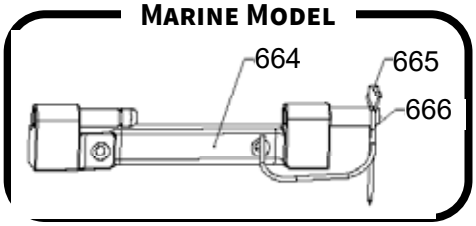

Marine Model

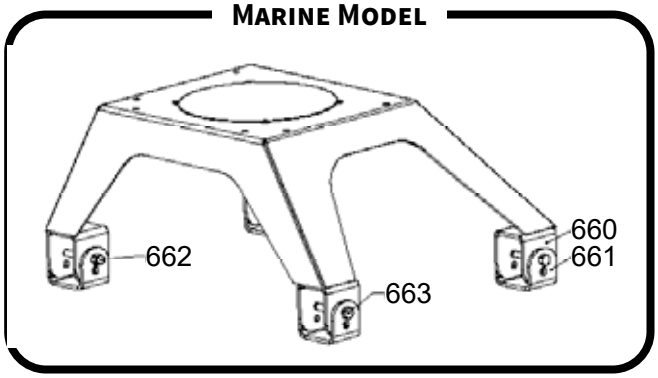

Vegetable Preparation Machine RG-300i

No. on drawing	Item No.	Description	Pcs
170	14009	MC6S M4x40	6
180	14464	Screw LKCSF M6X16	4
190	47121	Bracket Compl. 380-415	1
200	47209	Axle Bracket compl.	1
210	47085	Bushing	1
215	47118	Bushing	1
220	47076	Micro switch compl.	1
230	15565	Micro switch XGT42C-86-S20Z1	2
240	15443	Nut PR 22.5/PG16 metal	1
245	10504	Kit ekvipotentiell koppling	1
250	15381	Cable ret PR 22.5 dia 15	1
260	15142	Supply cord CB 3 phse	1
270	14086	Lock washer FBB 6.1 A2	8
280	14006	Nut M6M M6 A2 70	2
285	14007	Nut, locking LM M6 A2	10
300	47099	El-plate	1
310	40556	DIN-rail TS35 DIN EN 50022	2
315	15827	Overload rel.RF120320	1
320	15818	Contactor 11BG0610A400	1
320	15810	Contactor 11BG0610A230	2
325	24664	Grommet	1
330	15110	RC-circuit 230v	1
345	14616	Screw RTK ST3.5X6.5 A2 70	2
350	47015	Machine housing back	1
360	15202	Cable tie/screw mount	1
370	14004	Nut M6M M4 A2 70	1
380	47060	Electric unit 380-415 3 50/60	1
400	47006	Screw M6 axle	1
410	47009	Knife shaft	1
420	47210	Locking lug compl.	1
430	37297	Tray	1
440	47008	Motor plate	1
445	10444	Seal ring basl 35X52X10	1
450	47047	Motor	1
480	15439	Push button o complete	1
490	15440	Push button 1 complete	1
510	47017	Hinge Male	1
511	37206	Seal ring	1
512	14147	Screw MFS M6x40	1
513	14013	Screw MFS M6x30	1
520	15385	Fuse holder	1
521	15384	Fuse T100MA	1
522	15380	Safety for fuse	1
523	14611	Screw RTS ST2.9X9.5 A2 70 Form C	1
560	47125	Machine house	1
600	37085	Cover feet	2
610	10328	Foot Rubber	2
630	47211	Wheel compl.	2
640	14854	Screw MRT M6X12 A2	6
650	47350	Base	1
660	47450	Base Marine	1
661	37503	Weld plate	4
662	14028	Nut MHM M8	4
663	14553	Screw M6S M8X70 A2 70	4
664	47451	Hinge Marine	1
665	37511	Hinge locking pin	1
666	37513	Wire	1

Vegetable Preparation Machine RG-300i: Manual Feeder, Ergo-loop

No. on drawing	Item No.	Description	Pcs
10	47090	Pusher handle ergo	1
20	47052	Shaft L=40	2
30	40848	Bushing	4
40	25191	Screw for link system	2
50	40554	Pestle	1
60	3257	Guide knob	3
70	47049	Feeder plate incl. Shaft	1
80	47014	Link	1
90	47089	Screw	2
100	47086	Sleeve for link system	1
110	47088	Pin	1
120	14833	Lock screw	1
130	47087	Bushing	2
140	3129	Decoring device 3ph	1
150	3162	Wrench	1
160	47119	Sleeve	1

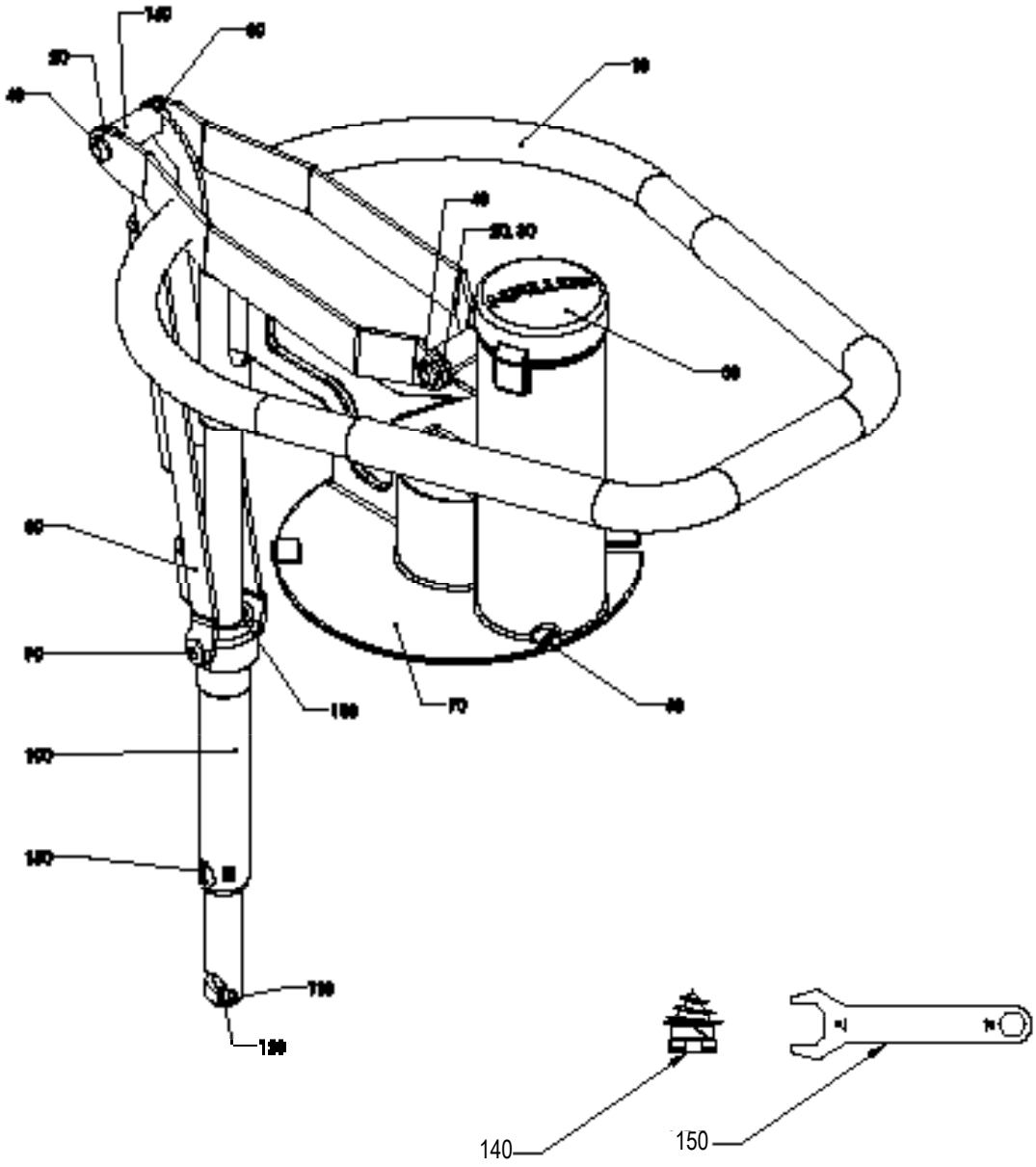

Vegetable Preparation Machine RG-300i: Feed Cylinder

No. on drawing	Item No.	Description	Pcs
10	47011	Feed cylinder	1
20	47360	Locking handle compl.	1
30	47361	Magnet compl.	1

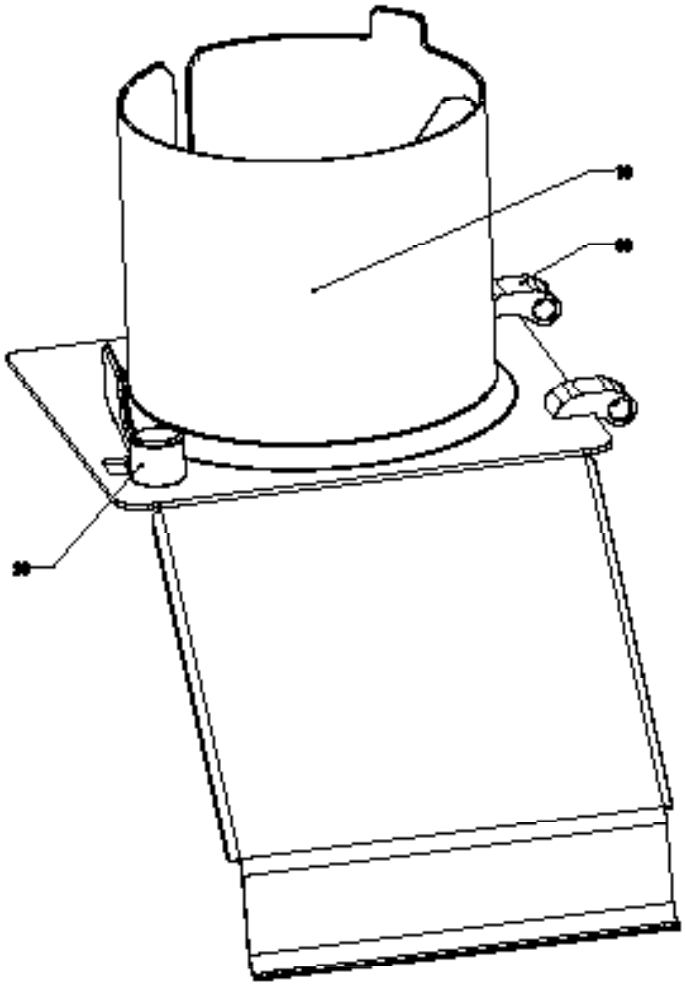

Vegetable Preparation Machine RG-300i: Feed Hopper

No. on drawing	Item No.	Description	Pcs
10	10345	Plug GL 28 black	1
20	10343	Handle I280/65-M8	1
30	3149	Stud screw	1
40	47093	Shaft	1
50	14028	Nut MHM M8	1
60	47314	stirrer, compl	1
70	3311	Agitator arm	1
80	47320	Hopper insert compl.	1
90	14026	Domed head nut MHM M6	4
100	14865	Stud screw SK6SS A4	4
110	37081	Guide	2
120	47318	Feed cylinder for hopper	1
130	47360	Locking handle compl.	1
140	47361	Magnet compl.	1
150	10521	Socket wrench NV10	1
160	3162	Wrench	1
170	40891	Stiring sleeve	1

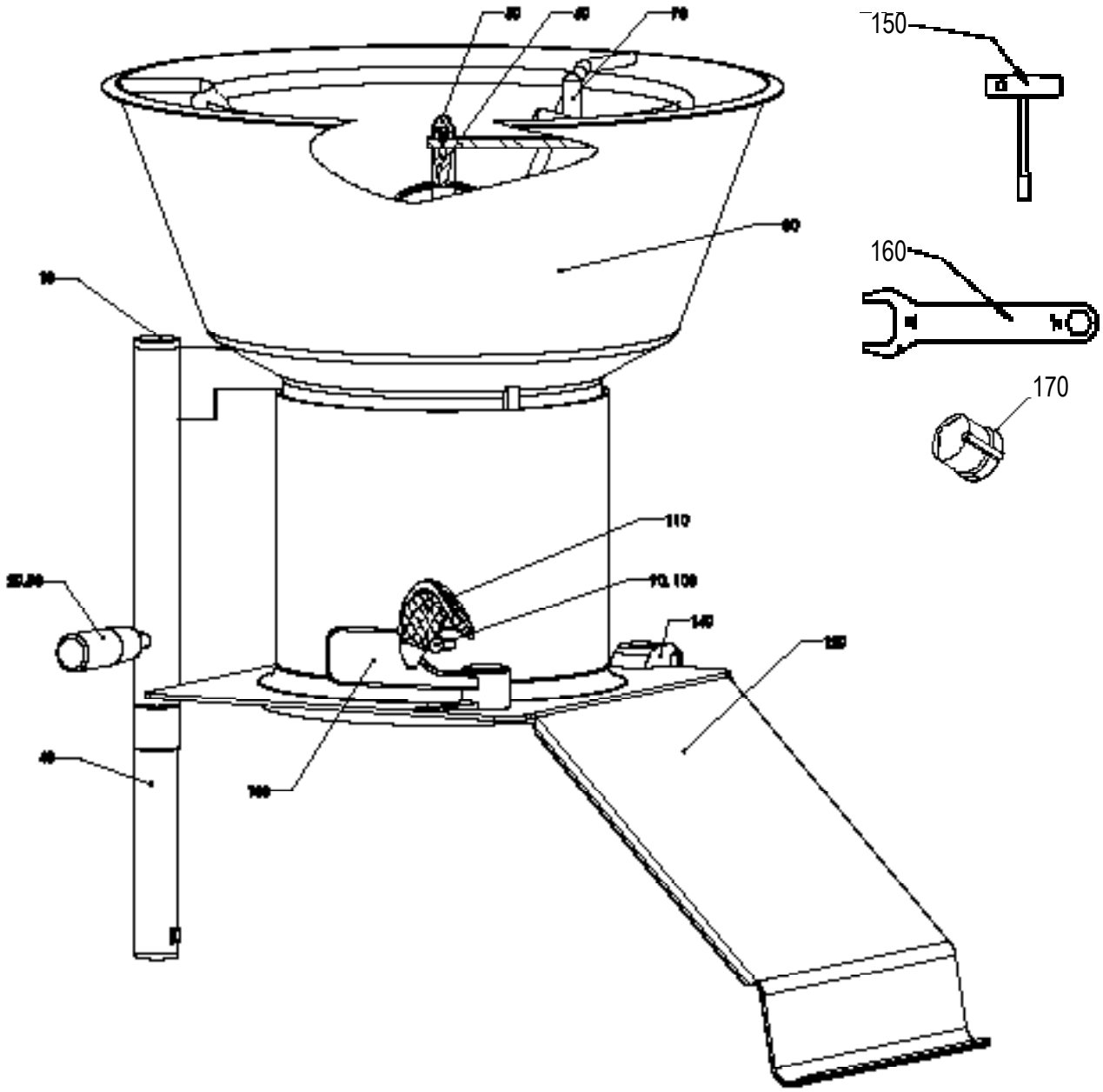

Vegetable Preparation Machine RG-300i: 4-Tube insert

No. on drawing	Item No.	Description	Pcs
10	10345	Plug GL 28 black	1
20	47507	Stand	1
30	3149	Stud screw	1
40	10343	Handle I280/65-M8	1
50	47093	Shaft	1
60	37138	Spacer 16	2
70	14028	Nut MHM M8	2
80	14088	Lock washer FBB 8.2 A2	2
90	47510	4-tube insert	1
100	3257	Guide knob	3
110	10455	Plug IKPT 1715S	2
120	10329	Plug IR20/40/1,5 S	1
130	14394	Screw MC6S M8X35	2
140	47519	Pestle dia. 55	1
150	47521	Pestle dia. 31	1
160	3204	Locking bolt TR12V	1
170	3162	Wrench	1

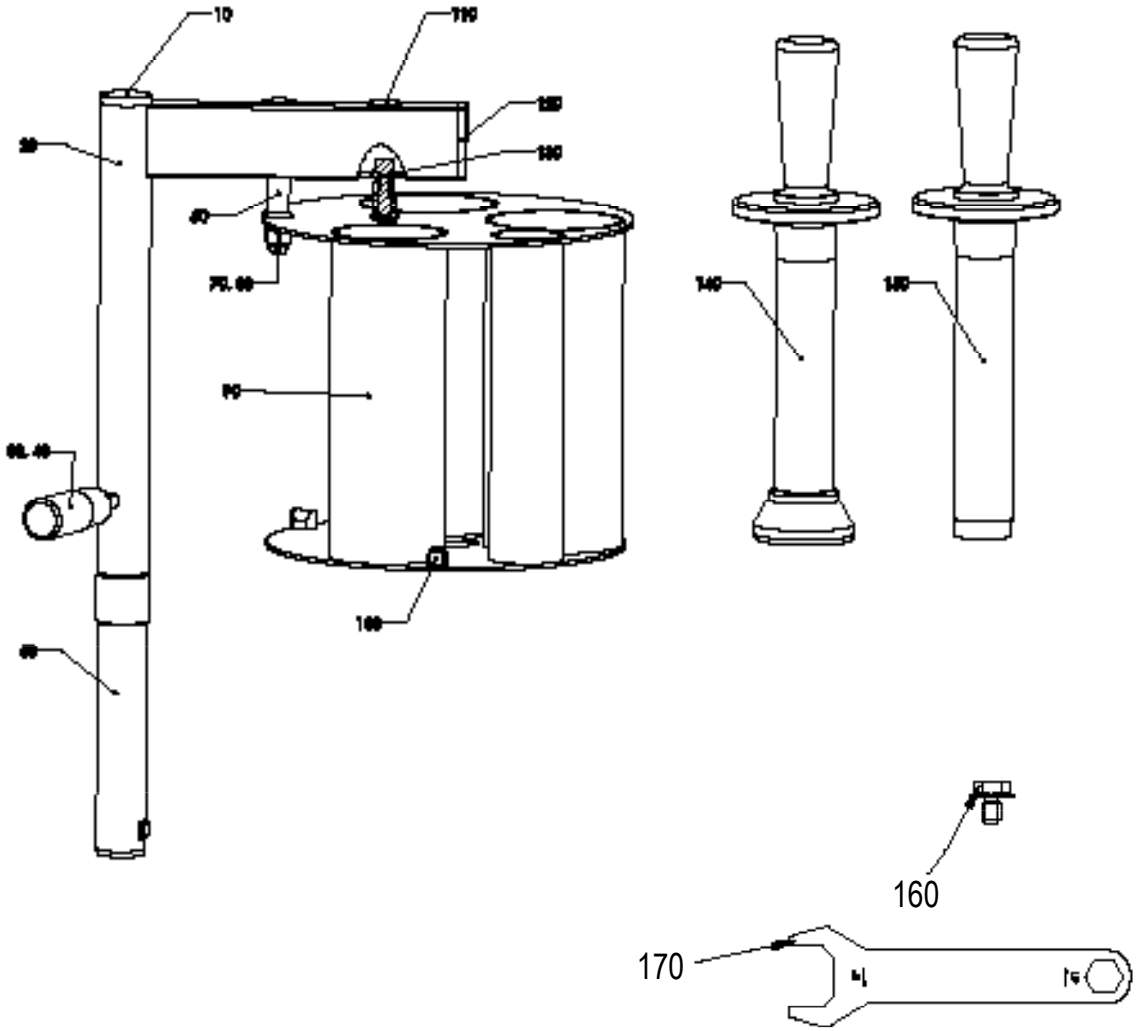

Vegetable Preparation Machine / Cheese Shredder RG-400i

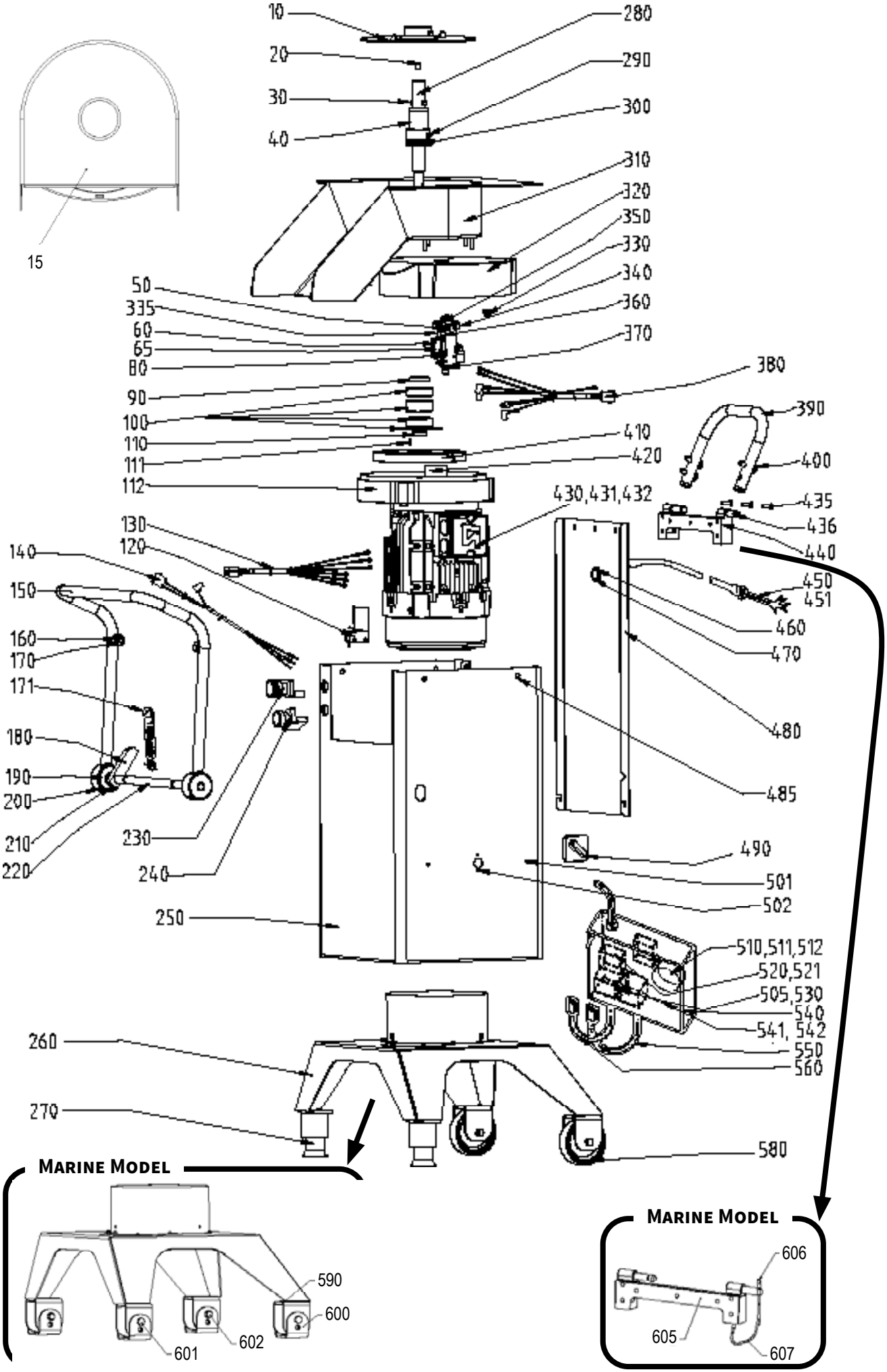

Vegetable Preparation Machine / Cheese Shredder RG-400i

No. on drawing	Item No.	Description	Pcs
10	37042	Ejector plate	1
15	37297	Tray	1
20	14844	Locking screw PSS M8X 12 A2 70	1
30	40548	Carrier pin	1
40	37389	sleeve	1
50	14853	Screw MRT M4X6 A2	4
60	37215	Micro switch unit kompl.	1
65	37245	Micro switch XGT2C-86-Z1	1
80	37388	Spring, safety switch	1
90	10318	Seal ring 25X40X7	1
100	37152	Ball bearings kompl.	1
110	3056	Spacer ring 20/28	1
111	10321	Key PKR 6X6X16	1
112	37158	Motor bearer complete	1
120	37343	Micro switch complete XGG2A	1
130	3194	Wiring loom motor	1
140	37367	Wiring loom, machine	1
150	37017	Lock handle	1
160	37217	Roller locking handle	2
170	10326	Lock ring SGA 8 SS	2
171	3111	Tension spring	2
180	3108	Stopper for lock handle	1
190	3089	Bushing for lock handle	2
200	14849	Screw TSS 8X25 A2 70	2
210	14845	Screw TSS 8X15 A2 70	1
220	37020	Shaft lock handle	1
230	15439	Push button o complete	1
240	15440	Push button 1 complete	1
250	37075	Machine housing front part	1
260	37052	Base	1
270	37154	Feet complete	1
280	37072	Knife shaft complete	1
290	37059	Carrier pin for ejector plate	2
300	10311	Seal ring V-35S	1
310	37001	Knife chamber	1
320	37006	Gearbox top	1
330	14006	Nut M6M M6 A2 70	6
335	10539	O-ring 21.1X1.6	1
340	37047	Casing for switch	1
350	10325	Seal ring 17.1X1.6	2
360	37172	Shaft safety switch	1
370	37250	Bushing	1
380	37366	Wiring loom, machine	1
390	3110	Handle knifechamber	1
400	14375	Screw MCS M8X25 A2 70	4
410	37156	Gear wheel 173.2 complete	1
420	37155	Gear wheel 53.6 complet	1
430	15435	Motor 400-415 3 50	1
431	15433	Motor 220 3 50 4-8 RG-400	1
432	15432	Motor 208-220 3 60 UL	1
435	14269	Screw MKFS M6X25 A2 70	3
436	37206	Seal ring	1
440	37018	Hinge	1
450	15144	Supply cord CB 3 phse	1
451	3193	Supply cord US	1
460	15381	Cable ret PR 22.5 dia 15	1
470	15443	Nut PR 22.5/PG16 metal	1

Vegetable Preparation Machine / Cheese Shredder RG-400i

No. on drawing	Item No.	Description	Pcs
480	37023	Machine housing back part	1
485	14464	Screw LKCSF M6X16	4
490	15442	Pole changing switch incl knob	1
501	14428	Screw M4x20 A2 70	2
502	14853	Screw MRT M4X6 A2	2
505	15718	Varistor S20K510	1
510	15589	Transformer 208-240v 22-26v UL	1
511	15611	Transformer 400/380V-24 50VA	1
512	15689	Transf. 440-415V 24 100VA 80C	1
520	15814	Overl. rel. RF12400	1
521	15816	Overload RF120630	1
530	15825	Contactor 11BG0910A024	2
540	15587	Box CT-841	1
541	15152	Fuse	1
542	15672	Insulation sleeve 6.3-0.8 FLAG	1
550	3195	Wiring loom pole changening	1
560	3192	Wiring loom electrical box	1
580	37153	Wheel complete	1
590	37501	Base Marine	1
600	37503	Weld plate	4
601	14553	Screw M6S M8X70 A2 70	4
602	14028	Nut MHM M8	4
605	37509	Hinge Marine	1
606	37511	Hinge locking pin	1
607	37513	Wire	1

Vegetable Preparation Machine RG-400i/ RG-400: Manual Push Feeder, Ergo-loop

No. on drawing	Item No.	Description	Pcs
10	10335	Lock ring SGA 10	6
20	3298	Pivot L=38	1
30	33431	Push handle Ergo	1
40	3066	Link	1
50	3297	Pivot L=51	1
60	37148	Stand complete	1
70	14149	Screw MFS M5X16	1
80	37244	Bushing	1
90	37160	Shaft stand	1
100	3212	Pin for stand L=28	1
110	10452	Plug SFL 14	1
120	3074	Bushing for stand	2
130	37061	Feeder plate including shaft	1
140	3299	Pivot L=34	1
150	3129	Decoring device 3ph	1
160	3162	Wrench	1
170	3257	Guide knob	3

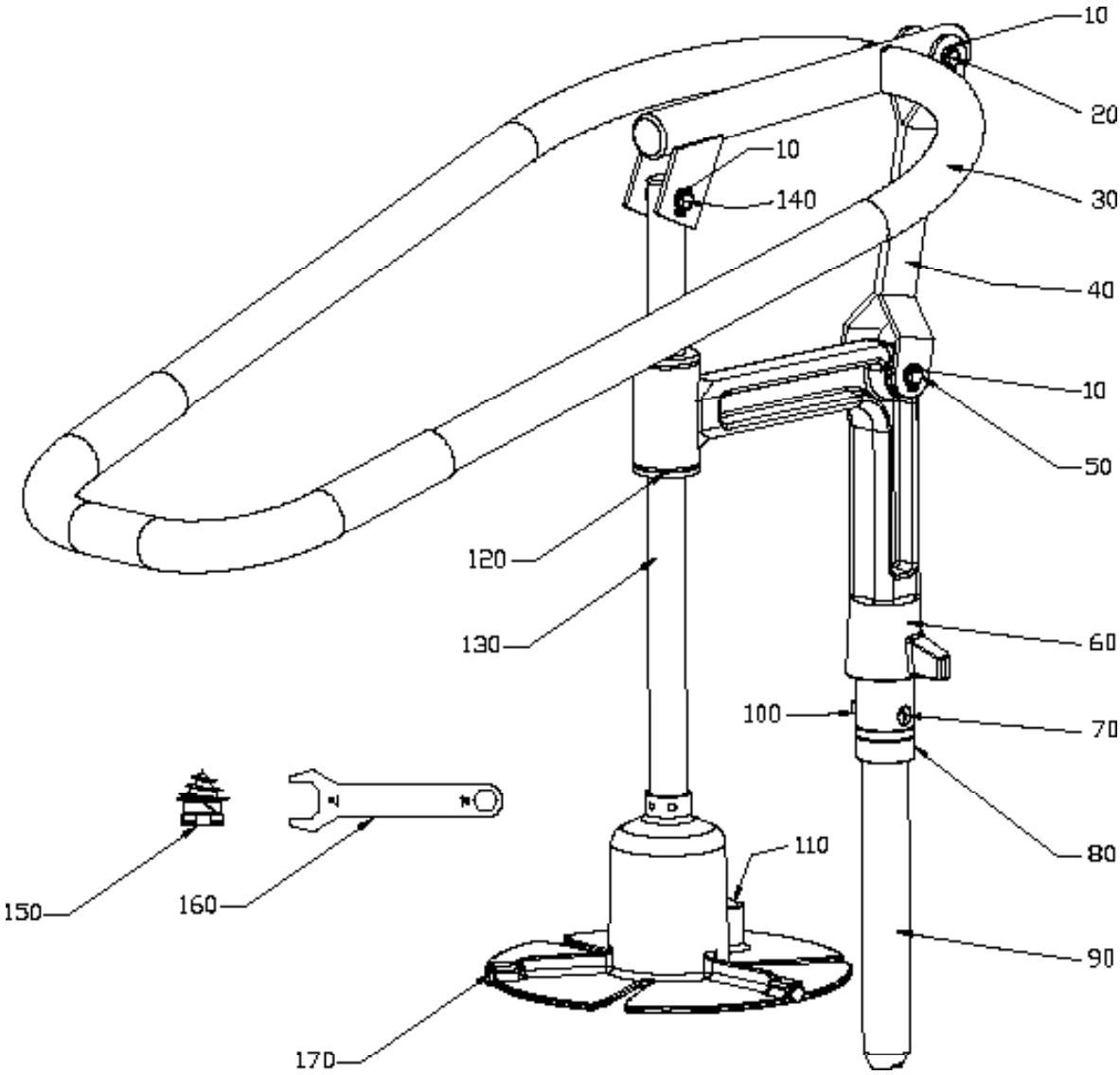

Vegetable Preparation Machine RG-400i: Feed Cylinder A

No. on drawing	Item No.	Description	Pcs
10	3233	Nut M5	9
20	3134	Knife	3
30	37024	Feed cylinder RG-400i	1
40	14326	Screw MCS M4X16	1
50	14004	Nut M6M M4 A2 70	1
60	37097	Slide knob	1
70	37149	Stopper complete	1
80	3253	Bayonet sleeve	1
90	14243	Screw MKFS M5X10	2
100	37162	Locking clutch complete	1
110	37151	Bushing holder complete	1
120	37243	Bushing	1
125	10521	Socket wrench NV10	1
130	37507	T handle	1
140	37505	Locking house	1
150	37515	Spring Marine	1
160	14148	Screw MFS M5X14	2
170	3233	Nut M5	2
180	37506	Locking pin	1
190	14362	Screw MFS M6x8 A4	2
200	37512	Holder Marine	1
210	37022	Locking distance	2
220	14121	Screw MFS M4X6 A2 70	4

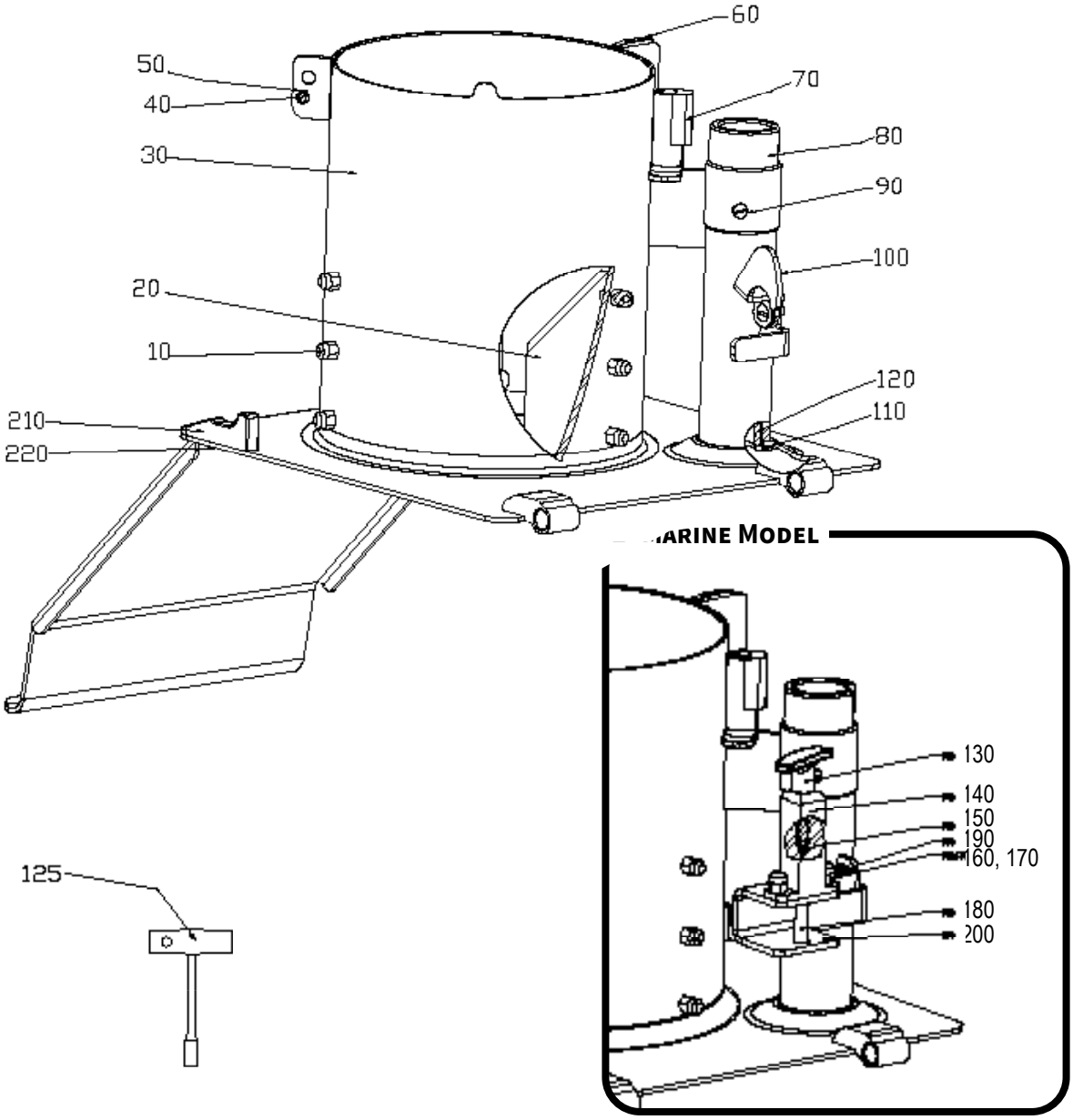

Vegetable Preparation Machine RG-400i: Feed Cylinder B

No. on drawing	Item No.	Description	Pcs
30	37204	Manual feed cylinder RG400i	1
40	14326	Screw MCS M4X16	1
50	14004	Nut M6M M4 A2 70	1
60	37097	Slide knob	1
70	37149	Stopper complete	1
80	3253	Bayonet sleeve	1
90	14243	Screw MKFS M5X10	2
100	37162	Locking clutch complete	1
110	37243	Bushing	1
120	37151	Bushing holder complete	1
130	37507	T handle	1
140	37505	Locking house	1
150	37515	Spring Marine	1
160	37506	Locking pin	1
170	14148	Screw MFS M5X14	2
180	3233	Nut M5	2
190	14362	Screw MFS M6x8 A4	2
200	37512	Holder Marine	1
210	37022	Locking distance	2
220	14121	Screw MFS M4X6 A2 70	4

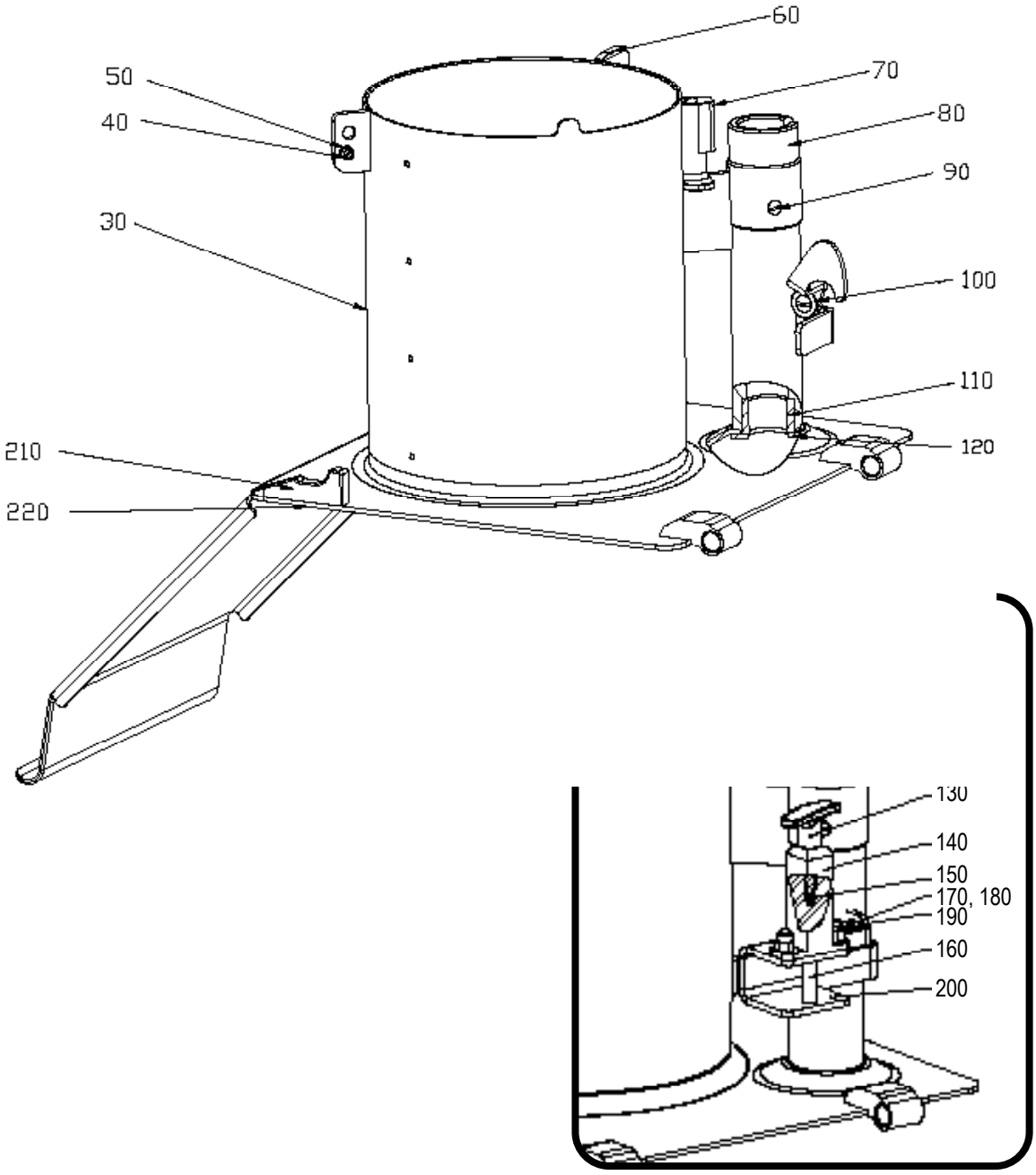

VVegetable Preparation Machine RG-400i: Feed Hopper

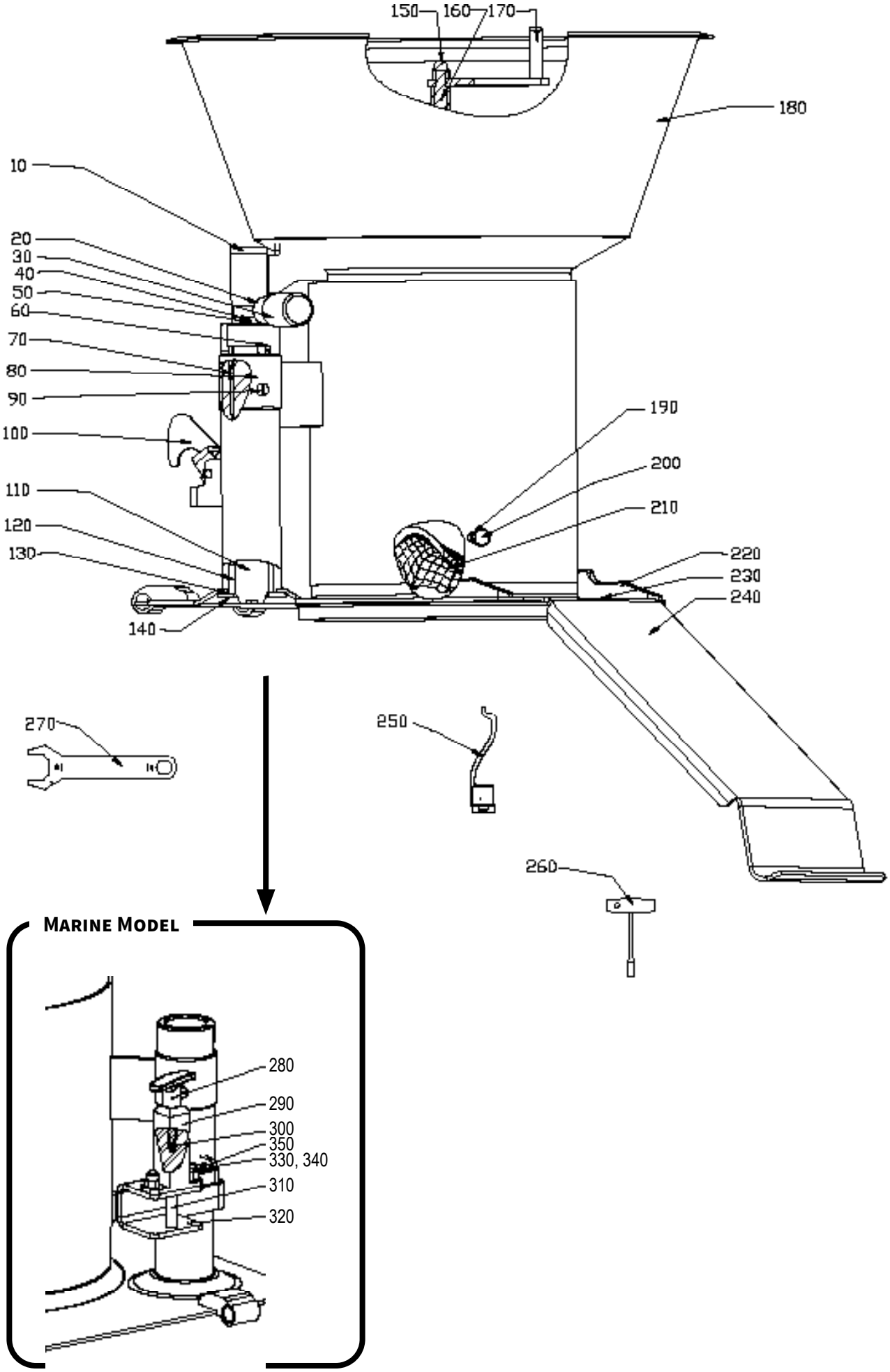

Vegetable Preparation Machine RG-400i: Feed Hopper

No. on drawing	Item No.	Description	Pcs
10	10345	Plug GL 28 black	1
20	3149	Stud screw	1
30	10343	Handle I280/65-M8	1
40	10453	Spring 1X5X17	1
50	10454	Ball RB-6.35	1
60	3131	Bayonet pin	1
70	3266	Bushing	1
80	3253	Bayonet sleeve	1
90	14243	Screw MKFS M5X10	2
100	37162	Locking clutch complete	1
110	37226	Shaft w. bushing	1
120	37243	Bushing	1
130	37100	Bushing holder	1
140	14101	Screw	3
150	14028	Nut MHM M8	1
160	3246	Stirrer for hopper	1
170	3311	Agitator arm	1
180	33328	Hopper insert complete	1
190	14026	Domed head nut MHM M6	4
200	14865	Stud screw SK6SS A4	4
210	37081	Guide	2
220	37022	Locking distance	2
230	14121	Screw MFS M4X6 A2 70	4
240	37103	Feed cylinder for hopper RF	1
250	3249	Agitator device complete	1
260	10521	Socket wrench NV10	1
270	3162	Wrench	1
280	37507	T handle	1
290	37505	Locking house	1
300	37515	Spring Marine	1
310	37506	Locking pin	1
320	37512	Holder Marine	1
330	14148	Screw MFS M5X14	2
340	3233	Nut M5	2
350	14362	Screw MFS M6x8 A4	2

Vegetable Preparation Machine RG-400i/ RG-400: Pneumatic Push Feeder

No. on drawing	Item No.	Description	Pcs
10	3098	Stand	1
15	37289	Adapter plate	1
20	3212	Pin for stand L=28	1
30	14149	Screw MFS M5X16	1

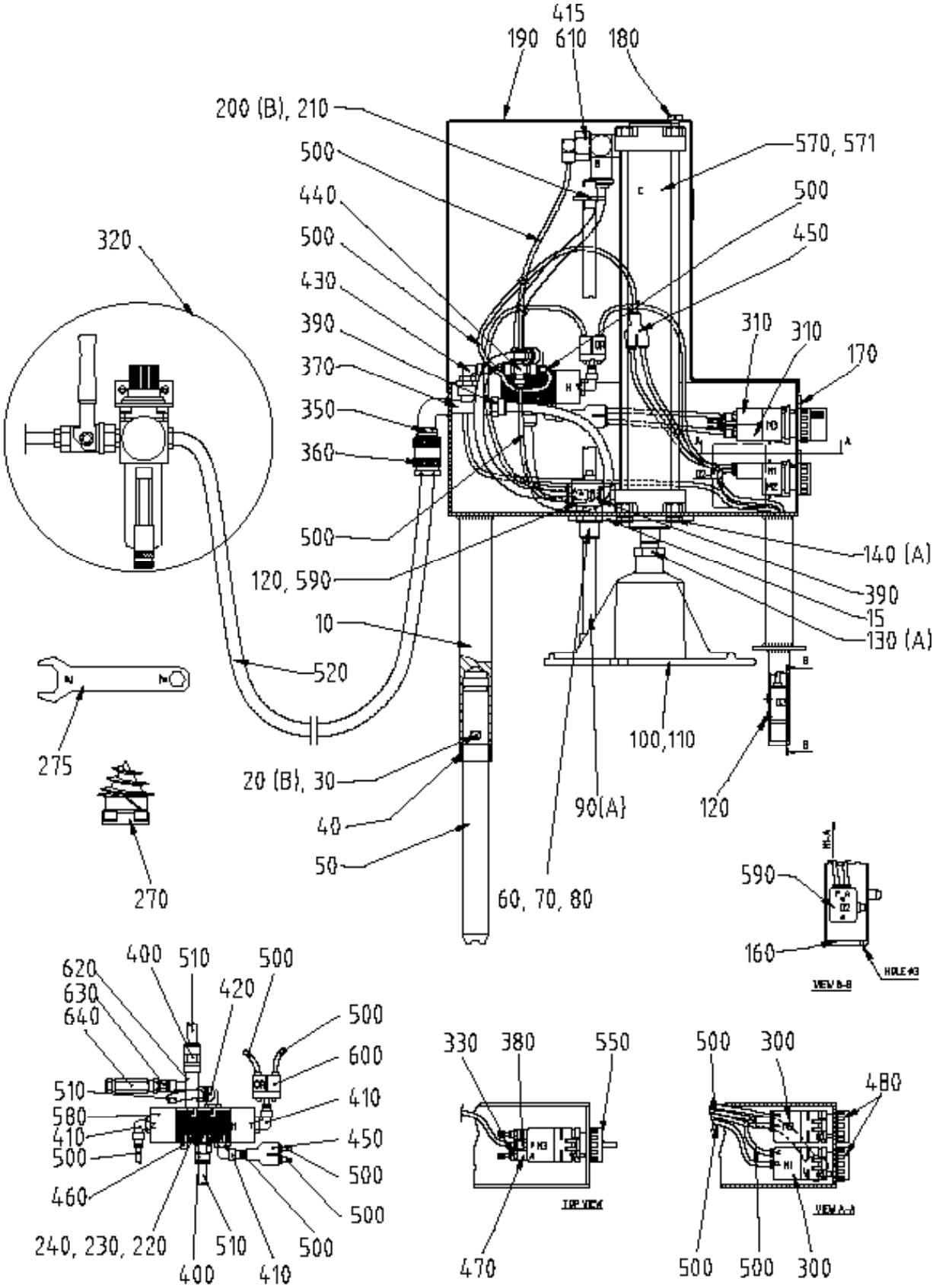

Vegetable Preparation Machine RG-400i/ RG-400: Pneumatic Push Feeder

No. on drawing	Item No.	Description	Pcs
40	37244	Bushing	1
50	37160	Shaft stand	1
60	37378	Bearing holder	1
70	10348	Bushing PM12/14X15DX	2
80	3101	Nut M18	1
90	3080	Operation rod	1
100	37040	Piston	1
110	3257	Guide knob	3
120	14224	Screw MKFS M4X12	4
130	3295	Nut M16X1,5 low	1
140	14542	Screw M6SH M8X16 A2 70	4
160	10329	Plug IR20/40/1,5 S	1
170	10367	Sign 1-3-2	1
180	14374	Screw MCS M8X20 A2 70	1
190	3099	Cap	1
200	14012	Nut M6M M12	1
210	3105	Thrust washer	1
220	14230	Screw MKFS M4X30	2
230	14004	Nut M6M M4 A2 70	3
240	14084	Lock washer FBB 4.1 A2	2
270	3129	Decoring device 3ph	1
275	3162	Wrench	1
300	10109	Valve 234-000	2
310	10354	Valve 245 000	2
320	10392	Regulator Compl.	1
330	10356	Valve reduser MCO-702-M5	2
350	10112	Adaptor 5180 1/4	1
360	10357	Quick connector 5084-10/8	1
370	10120	Tee niple 1/4	1
380	10358	Coupling 6512-4-M5	2
390	10095	Coupling 6510-8-1/4	2
400	10359	Coupling 6510-8-1/8	2
410	10117	Elbow coupling 6520-4-1/8	3
415	10097	Elbow coupling 6520-4-1/8	1
420	10360	Elbow coupling 6520-8-1/8	1
430	10361	Elbow coupling 6520-4-1/4	1
440	10119	Cross coupling 6600-4	1
450	10362	Coupling Y 6560-4	2
460	10363	Silencer 2991-1/8	1
470	10364	Silencer 2905-M5	2
480	10492	Push button 200-895 start/stop	2
500	10234	Hose PA12 4-2.7	1
510	10235	Hose PUR-8/5.7	1
520	10368	Hose PV10/8	1
550	10493	Twist knob speed control	1
570	10490	Cylinder complete	1
571	33311	Gasket kit for cylinder	1
580	10352	Valve 358-033-1/8	1
590	10108	Valve 234-945	2
600	10353	Valve or 81540 001	1
610	10240	Valve 7880-08-13	1
620	10546	T-coupling	1
630	10547	Reduce	1
640	10548	Gauge	1

Vegetable Preparation Machine RG-400i: 4-Tube Insert

No. on drawing	Item No.	Description	Pcs
10	10345	Plug GL 28 black	1
20	3254	Stand	1
30	3149	Stud screw	1
40	10343	Handle I280/65-M8	1
50	10454	Ball RB-6.35	1
60	10453	Spring 1X5X17	1
70	3131	Bayonet pin	1
80	37137	Bushing	1
90	37139	Shaft w. bushing M99	1
100	14028	Nut MHM M8	2
110	14088	Lock washer FBB 8.2 A2	2
120	37064	4-tube insert	1
130	3257	Guide knob	3
135	37138	Spacer 16	2
140	10455	Plug IKPT 1715S	2
150	3279	Sign warning	1
160	10329	Plug IR20/40/1,5 S	1
170	14394	Screw MC6S M8X35	2
200	3139	Pestle dia. 55	1
210	3138	Pestle dia. 31	1
220	3204	Locking bolt TR12V	1
230	3162	Wrench	0

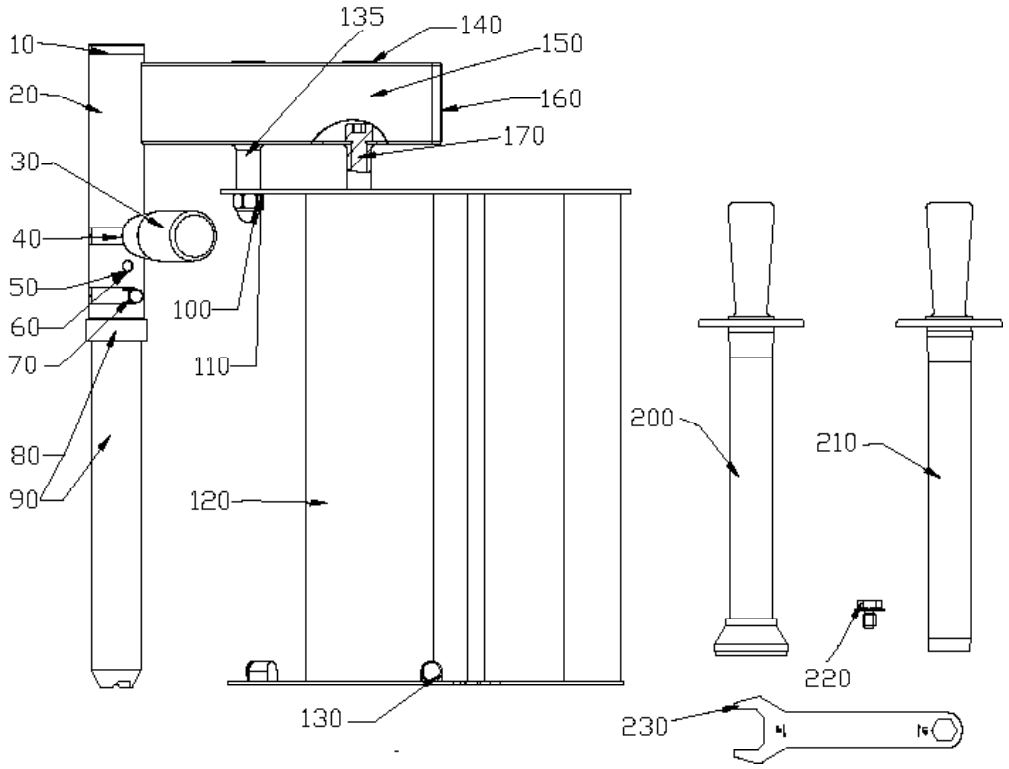

Vegetable Preparation Machine / Cheese Shredder RG-400i: Cheese Feeder

No. on drawing	Item No.	Description	Pcs
10	37148	Stand complete	1
15	10335	Lock ring SGA 10	3
20	3297	Pivot L=51	3
30	37666	Link Cheese	1
40	3299	Pivot L=34	1
50	37630	Push handle Ergo Cheese	1
60	37661	Feeder plate including shaft	1
70	3074	Bushing for stand	2
80	10452	Plug SFL 14	1
90	3257	Guide knob	3
100	37244	Bushing	1
105	37618	Shaft stand Cheese	1
110	14149	Screw MFS M5X16	1
115	3212	Pin for stand L=28	1
120	3253	Bayonet sleeve	1
130	37162	Locking clutch complete	1
140	37243	Bushing	1
150	37151	Bushing holder complete	1
160	37611	Feed Cylinder, Cheese Shredder	1
165	37149	Stopper complete	1
170	37097	Slide knob	1
180	37022	Locking distance	2
185	14121	Screw MFS M4X6 A2 70	4
190	3162	Wrench	1
200	3129	Decoring device 3ph	1

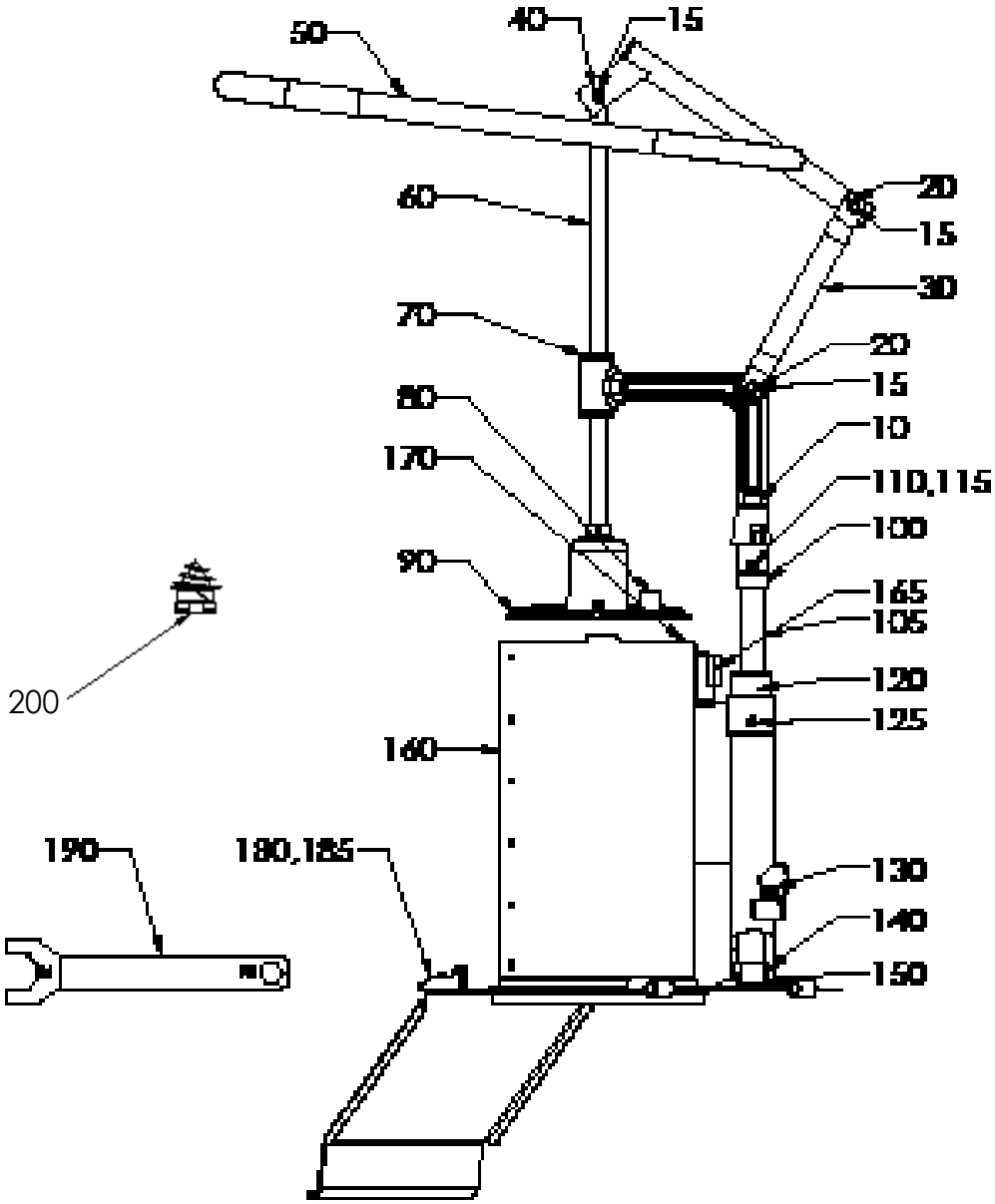

Vegetable Preparation Machine RG-400

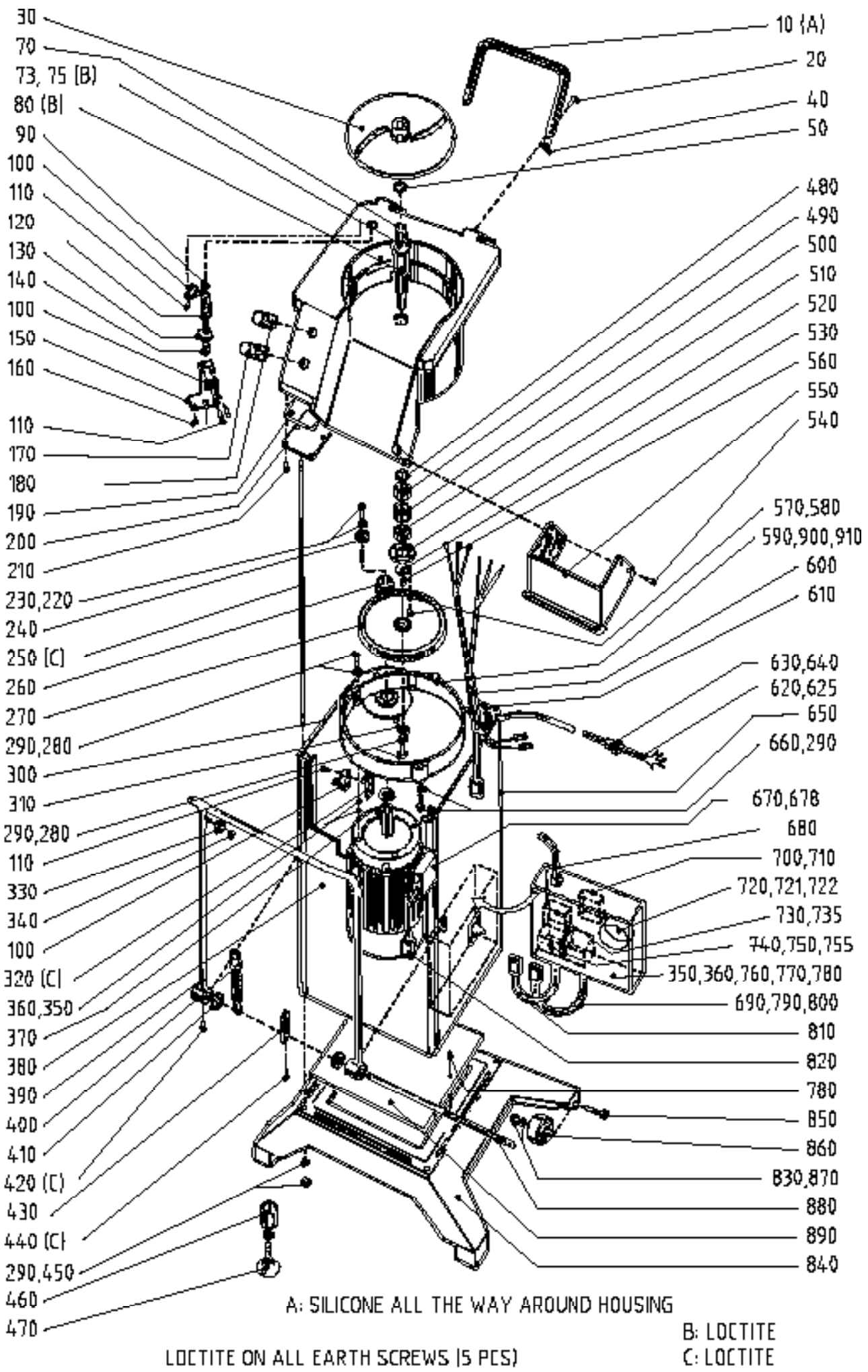

Vegetable Preparation Machine RG-400

No. on drawing	Item No.	Description	Pcs
10	3110	Handle knifechamber	1
20	14376	Screw MCS M8X30 A270	2
30	3086	Ejector plate	1
40	10344	Plug GL 320 black	2
50	10311	Seal ring V-35S	1
70	3180	Knife shaft compl.	1
73	40548	Carrier pin	1
75	14844	Locking screw PSS M8X 12 A2 70	1
80	3152	Carrier pin for ejector plate	2
90	10325	Seal ring 17.1X1.6	1
110	14308	Screw MCS M3X20 A270	6
120	33317	Shaft safety switch M99	1
130	3126	Thrust plate	1
150	3124	Bracket f. safety switch	1
160	14512	Screw M6SH M5X10 A2 70	3
170	15439	Push button o complete	1
180	15440	Push button 1 complete	1
190	10323	Seal ring dia. 2.4 L=325	1
200	3096	Cover plate	1
210	14662	Screw KFSS ST3.5X13 A2 70	6
220	14564	Screw M6SH M10X30 A2 70	1
230	14090	Washer FBB 10.2 A2	1
240	3159	Washer for geel wheel, motor	1
250	3061	Pull rod M 8	4
260	3083	Gear wheel 52.6	1
270	3057	Gear wheel 173.2	1
280	14544	Screw M6SH M8X22 A2 70	5
290	14088	Lock washer FBB 8.2 A2	7
300	3060 4	Machine housing left part	1
310	3158	Washer gear wheel, knife shaft	1
320	3130	Bracket f handle locking	1
330	37217	Roller locking handle	2
340	10326	Lock ring SGA 8 SS	2
350	14084	Lock washer FBB 4.1 A2	1
360	14629	Screw RTK ST3,5X9,5	2
370	10342	Seal ring basl 42X55X7	1
380	3060 1	Machine housing front part	1
390	3078	Lock handle	1
400	3111	Tension spring	2
410	3089	Bushing for lock handle	2
420	14849	Screw TSS 8X25 A2 70	2
430	3108	Stopper for lock handle	1
440	14845	Screw TSS 8X15 A2 70	1
450	14048	Nut M8	4
460	3154	Protection tube	2
470	10328	Foot Rubber	2
480	10318	Seal ring 25X40X7	1
490	10320	Ball bearing 6205-2RS	1
500	3055	Spacer ring 20/28	1
510	10319	Ball bearing 6304 2RS	1
520	3054	Ball bearing cover	1
530	3056	Spacer ring 20/28	1
540	14443	Screw LKCSF M5X12 A2 70	4
550	3112	Safety guard	1
560	10321	Key PKR 6X6X16	1
570	14085	Lock washer FBB 5,1 A2	4
580	14343	Screw MCS M5X12 A4	4

Vegetable Preparation Machine RG-400

No. on drawing	Item No.	Description	Pcs
590	3120	Motor bearer	1
600	3191	Wiring loom, machine	1
610	3060 3	Machine housing back part	1
620	15144	Supply cord CB 3 phse	1
625	3193	Supply cord US	1
630	15381	Cable ret PR 22.5 dia 15	1
640	15443	Nut PR 22.5/PG16 metal	3
650	3060 2	Machine housing right part	1
660	14551	Screw M6S M8X60 A2 70	3
670	15432	Motor 208-220 3 60 UL	1
678	15435	Motor 400-415 3 50	1
680	15229	Cable retainer PR22,5	1
700	15442	Pole changing switch incl knob	1
710	14602	Screw FSS ST2,9X13 A2 70	2
720	15589	Transformer 208-240v 22-26v UL	1
721	15611	Transformer 400/380V-24 50VA	1
722	15689	Transf. 440-415V 24 100VA 80C	1
730	15814	Overl. rel. RF12400	1
735	15816	Overload RF120630	1
740	15825	Contactor 11BG0910A024	2
750	14630	Screw RTS ST3,5X13 FZB	8
755	15718	Varistor S20K510	1
760	15587	Box CT-841	1
770	15193	Ground plate M4	1
780	14731	Screw RXK ST4,8X9,5	6
790	3195	Wiring loom pole changening	1
800	15226	Cable seal 20,4	2
810	3192	Wiring loom electrical box	1
820	3194	Wiring loom motor	1
830	14028	Nut MHM M8	2
840	3117	Base	1
850	14553	Screw M6S M8X70 A2 70	2
860	10327	Wheel 85 RNP	2
870	10374	Washer 3MM nylon	4
880	3109	Shaft lock handle	1
890	3143	Fan plate	1
900	10322	0-ring 236,5X2,4	1
910	10350	Grease for gear box, GB0, 1kg	1

Vegetable Preparation Machine RG-400: Feed Cylinder

No. on drawing	Item No.	Description	Pcs
10	33305	Slide knob dia. 10X4	1
20	40839	Slide knob	2
30	14714	Screw CSS ST3,5X9,5	1
40	3085	Stopper, 4-tube/push feed att	1
50	3253	Bayonet sleeve	1
60	10334	Spring ST-TFR 0,5X4X35	2
70	14243	Screw MKFS M5X10	1
90	3234	Locking clutch f feed cylinder	1
100	3281	Plastic washer 18-6-2	1
110	10436	Plastic washer 05-6-15-3	1
120	14464	Screw LKCSF M6X16	1
130	3076	Bushing 25/34	1
140	3068	Bushing cover	3
150	14682	Screw KFSS ST4,8X13	3
160	3134	Knife	3
170	3233	Nut M5	9
180	14326	Screw MCS M4X16	1
190	14004	Nut M6M M4 A2 70	1

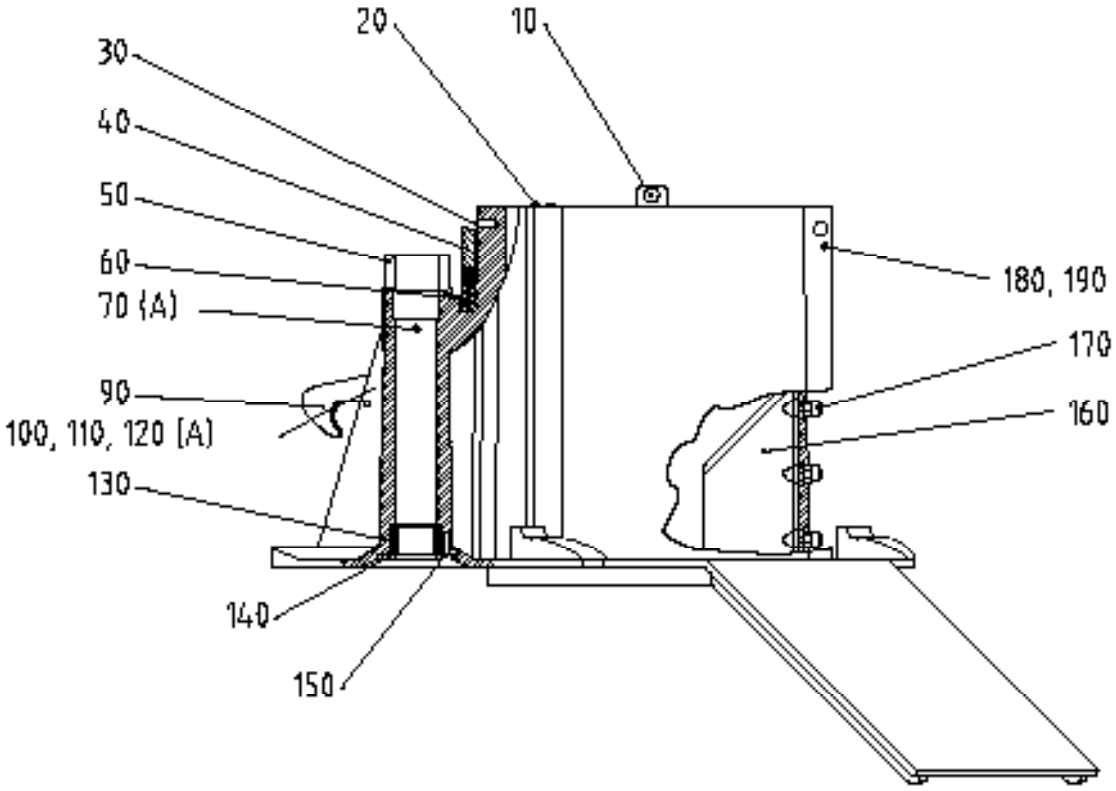

A: LOCTITE

Vegetable Preparation Machine RG-400: Feed Hopper

No. on drawing	Item No.	Description	Pcs
10	3311	Agitator arm	1
20	14464	Screw LKCSF M6X16	1
50	10345	Plug GL 28 black	1
60	3149	Stud screw	1
70	10454	Ball RB-6.35	1
80	10453	Spring 1X5X17	1
90	10343	Handle I280/65-M8	1
100	3131	Bayonet pin	1
110	3253	Bayonet sleeve	1
120	14243	Screw MKFS M5X10	2
130	3266	Bushing	1
140	3094	Shaft	1
145	37226	Shaft w. bushing	1
150	3234	Locking clutch f feed cylinder	1
160	3281	Plastic washer 18-6-2	1
170	10436	Plastic washer 05-6-15-3	1
190	3076	Bushing 25/34	1
200	3068	Bushing cover	1
210	14682	Screw KFSS ST4,8X13	3
220	14026	Domed head nut MHM M6	5
250	3246	Stirrer for hopper	1
260	3232	Guide	2
270	14865	Stud screw SK6SS A4	4
280	3249	Agitator device complete	1
290	3162	Wrench	1
300	10521	Socket wrench NV10	1
310	33328	Hopper insert complete	1

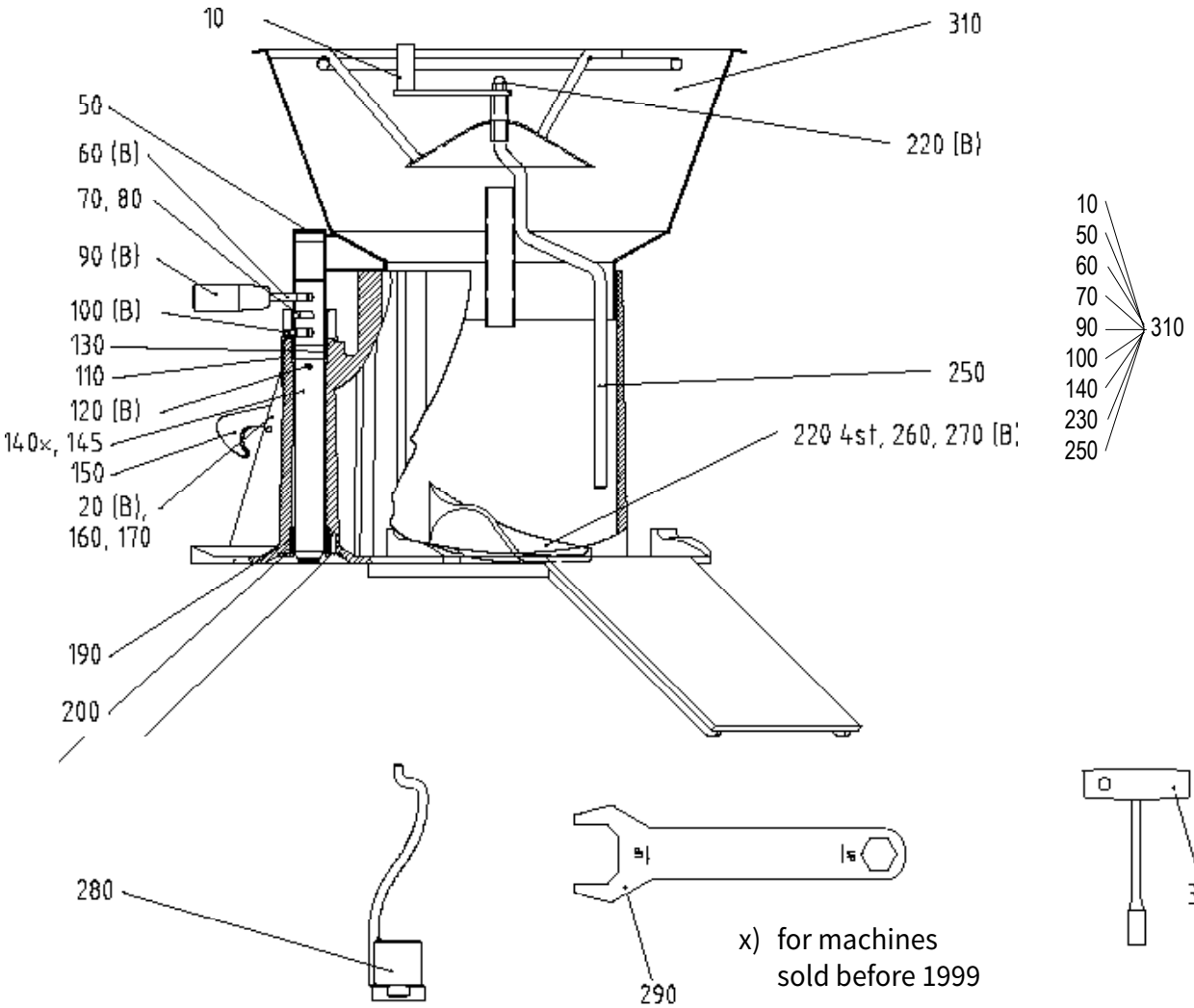

x) for machines sold before 1999

Vegetable Preparation Machine RG-400: 4-Tube Insert

No. on drawing	Item No.	Description	Pcs
10	3254	Stand	1
20	3149	Stud screw	1
30	10343	Handle I280/65-M8	1
40	10454	Ball RB-6.35	1
50	10453	Spring 1X5X17	1
60	3131	Bayonet pin	1
70	3266	Bushing	1
80	3094	Shaft	1
85	37163	Shaft	1
100	3251	Washer	2
110	14484	Screw LKCSF M8X16	2
120	10329	Plug IR20/40/1,5 S	1
130	10455	Plug IKPT 1715S	2
140	3256	Spacer 25	1
150	3255	Spacer 16	1
160	14395	Screw MC6S M8X40	2
170	3279	Sign warning	1
190	10345	Plug GL 28 black	1
200	3139	Pestle dia. 55	1
210	3138	Pestle dia. 31	1
220	3204	Locking bolt TR12V	1
230	33354	Shaft w. bushing M99	1

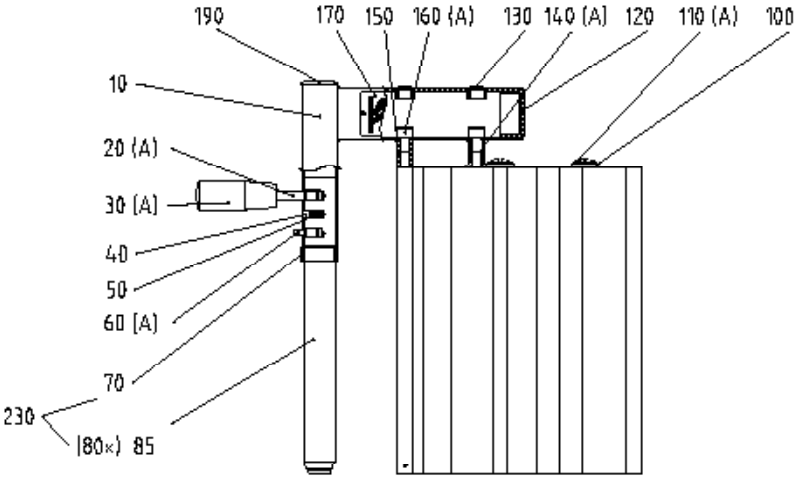

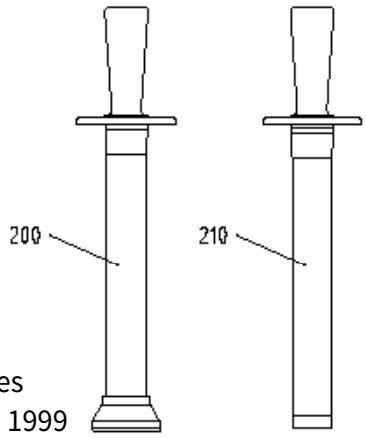

x) for machines sold before 1999

A: LOCTITE

Spare parts Cutting Tools: RG-100/RG-200/RG-250 diwash/RG-250

Slicer

2 knives: 0,5–2 mm

1 knife: 3–10 mm

Spare part	item No.	Description
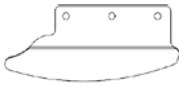	63303	Knife, Slicer 0.5-1 mm
	63324	Knife, Slicer 1.5-10 mm

Soft Slicer

Spare part	item No.	Description
	87114	Knife, Soft Slicer

Standard Slicer

Spare part	item No.	Description
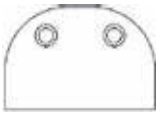	87111	Knife, Standard Slicer

Fine Cut Slicer

Spare part	item No.	Description
	87112	Knife, Fine Cut Slicer

Crimping Slicer

2 knives: 2 mm

1 knife: 3–6 mm

Spare part	item No.	Description
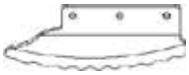	63301	Knife, Crimping Slicer
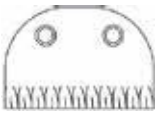	87113	Knife, Crimping Slicer

Serrated Slicer

Spare part	item No.	Description
	63507	Kit knife, Serrated Slicer

Spare parts Cutting Tools: RG-100/RG-200/RG-250 diwash/RG-250

Julienne Cutter

2 knives: 2x2–2x6 mm

1 knife: 3x3–10x10 mm

Spare part	item No.	Description
	63357	Kit Julienne 3x3 mm
	63354	Kit Julienne 2x6 mm
	63330	Kit Julienne 10x10 mm
	63331	Kit Julienne 2x2 mm
	63332	Kit Julienne 4x4 mm
	63333	Kit Julienne 6x6 mm
	63334	Kit Julienne 8x8 mm
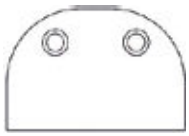	87111	Knife, Standard Slicer
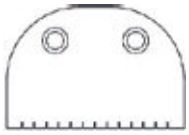	87116	Horizontal knife, 4.5x4.5 mm
	87117	Horizontal knife, 6x6 mm
	87118	Horizontal knife 8x8 mm
	87119	Horizontal knife 10x10 mm
	87120	Kit Knife block, 2x2 mm
	87121	Kit Knife block, 2x2 mm CC
	87122	Kit Knife block, 2.5x2.5 mm
	87123	Kit Knife block, 4.5x4.5 mm
	87124	Kit Knife block, 4.5x4.5 mm CC
	87125	Kit Knife Block, 6x6 mm
	87126	Kit knife block, 8x8 mm
	87127	Kit Knife block, 10x10 mm

Grater/Shredder

Spare part	item No.	Description
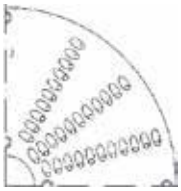	87101	Kit plate Grater 1.5 mm
	87102	Kit plate Grater 2 mm
	87103	Kit plate Grater 3 mm
	87104	Kit plate Grater 4.5 mm
	87105	Kit plate Grater 6 mm
	87106	Kit plate Grater 8 mm
	87107	Kit plate Grater 10 mm

Fine Grater

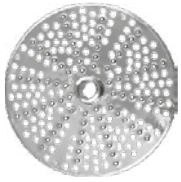

Spare part	item No.	Description
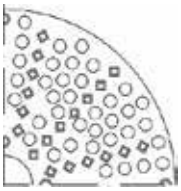	87108	Kit plate Fine Grater

Fine Grater, Extra Fine

Spare part	item No.	Description
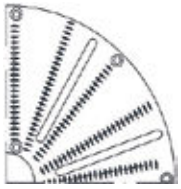	87109	Kit plate Fine Grater, Extra Fine

Hard Cheese Grater

Spare part	item No.	Description
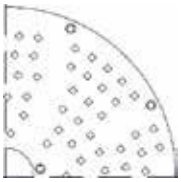	87110	Kit plate Hard Cheese Grater

Spare parts French Fries Grid: RG-250 diwash/RG-250

French Fries Grid	Spare part	item No.	Description
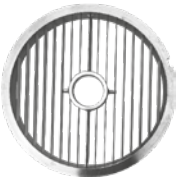		3797	Compl. kit knives French Fries Grid

Spare parts French Fries kit: CC-34/RG-50/RG-100/RG-250 diwash/RG-250

French Fries kit	Spare part	item No.	Description
		87114	Knife, Soft Slicer
	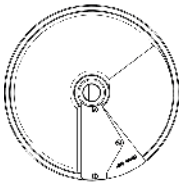	83457	French Fries Slicer 10 mm, compl. *Always combine with 83470.*
	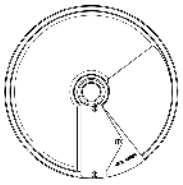	83460	French Fries Slicer 10 mm, compl. *Always combine with 83470.*
	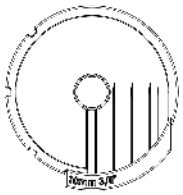	83470	French Fries Tool 10 mm *Always combine with 83457 or 83460.*

Spare parts Cutting Tools: RG-350/RG-300i/RG-400/RG-400i

Slicer

2 knives: 0,5–2 mm

1 knife: 3–10 mm

Spare part	item No.	Description
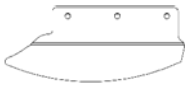	63302	Kit knife Slicer

Soft Slicer

Spare part	item No.	Description
	87141	Kit Knife Soft Slicer

Standard Slicer / HC Slicer

Spare part	item No.	Description
	87138	Kit Knife Standard Slicer

Fine Cut Slicer

Spare part	item No.	Description
	87139	Kit Knife Fine Cut Slicer

Crimping Slicer

Spare part	item No.	Description
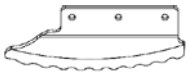	63300	Kit Kit knife Crimping Slicer
	87140	Kit Knife Crimping Slicer

HC Crimping Slicer

Część zapasowa	Nr kat.	Opis
	87140	Kit Knife Crimping Slicer

Serrated Slicer

Spare part	item No.	Description
	63508	Kit knife, Serrated Slicer

Spare parts Cutting Tools: RG-350/RG-300i/RG-400/RG-400i

Julienne Cutter / HC Julienne Cutter

2 knives: 0,5–2 mm 1 knife: 3–10 mm

HC Julienne Cutter

Spare part	item No.	Description
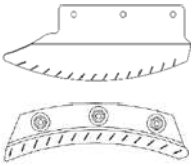	63356	Kit Julienne 2x6 mm
	63358	Kit Julienne 3x3 mm
	63335	Kit Julienne 10x10 mm
	63336	Kit Julienne 2x2 mm
	63337	Kit Julienne 4x4 mm
	63338	Kit Julienne 6x6 mm
	63339	Kit Julienne 8x8 mm
	87138	Knife Standard Slicer
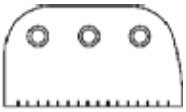	87145	Horizontal knife, 4x4 mm
	87146	Horizontal knife, 6x6 mm
	87147	Horizontal knife, 10x10 mm
	87157	Horizontal knife, 2x6 mm
	87156	Horizontal knife, 2x2 mm
	87159	Horizontal knife, 2x6 mm
	87142	Kit Knife Block, 2.5x2.5 mm
	87143	Kit Knife Block, 2.5x6 mm
	87148	Kit Knife Block, 2x2 mm
	87158	Kit Knife Block, 2x6 mm
	87149	Kit Knife Block, 4x4 mm
	87150	Kit Knife Block, 6x6 mm
	87151	Kit Knife Block, 10x10 mm

HC Julienne Cutter

Spare part	item No.	Description
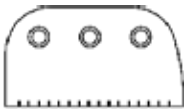	87152	Horizontal knife, 2x2 mm
	87153	Horizontal knife, 8x8 mm
	87155	Horizontal knife, 2.5x2.5 mm
	87154	Kit Knife Block, 8x8 mm

Grater/Shredder

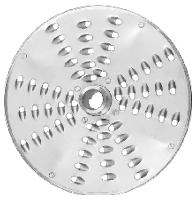

Spare part	item No.	Description
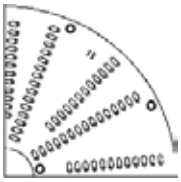	87128	Kit plate Grater 1.5 mm
	87129	Kit plate Grater 2 mm
	87130	Kit plate Grater 3 mm
	87131	Kit plate Grater 4.5 mm
	87132	Kit plate Grater 6 mm
	87133	Kit plate Grater 8 mm
	87134	Kit plate Grater 10 mm

Fine Grater

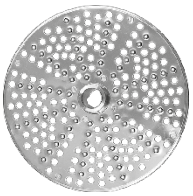

Spare part	item No.	Description
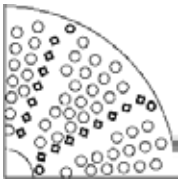	87135	Plate Fine Grater

Fine Grater, Extra Fine

Spare part	item No.	Description
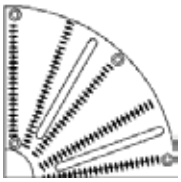	87136	Plate Fine Grater, Extra Fine

Spare parts Cutting Tools: RG-350/RG-300i/RG-400/RG-400i

Hard Cheese Grater	Spare part	item No.	Description
		87137	Plate Hard Cheese Grater

Spare parts Dicing Grid: RG-350/RG-300i/RG-400/RG-400i

Dicing Grid	Spare part	item No.	Description
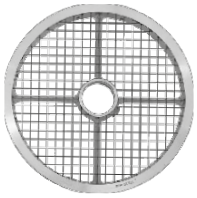		62743	Center ring
		37252	Ceramic kit
	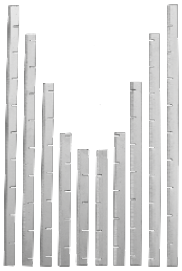 Complete knive kit for Dicing Grids	62431	Compl. kit knives, DG 6 mm
		62432	Compl. kit knives, DG 8 mm
		62433	Compl. kit knives, DG 10 mm
		62434	Compl. kit knives, DG 12 mm
		62435	Compl. kit knives, DG 15 mm
		62436	Compl. kit knives, DG 20 mm
		62437	Compl. kit knives, DG 25 mm
	1 meter knive blade for Dicing Grids.	82331	Knife blade, upper 6 mm, 1 M
		82332	Knife blade, lower 6 mm, 1 M
		82333	Knife blade, upper 8 mm, 1 M
		82334	Knife blade, lower 8 mm, 1 M
		82335	Knife blade, upper 10 mm 1 M
		82336	Knife blade, lower 10 mm, 1 M
		82337	Knife blade, upper 12 mm, 1 M
		82338	Knife blade, lower 12 mm, 1 M
		82339	Knife blade, upper 15 mm, 1 M
		82340	Knife blade, lower 15 mm, 1 M
		82341	Knife blade, upper 20 mm, 1 M
		82342	Knife blade, lower 20 mm, 1 M
		82343	Knife blade, upper 25 mm, 1 M
		82344	Knife blade, lower 25 mm, 1 M

Spare parts French Fries Grid: RG-350/RG-300i/RG-400/RG-400i

French Fries Grid	Reservdel	Art.nr.	Beskrivning
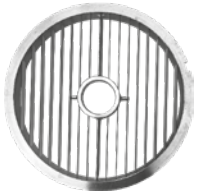		35734	Compl. Knife kit French Fries Grid
		62743	Center ring

HALLDE®

hallde.com

Food Preparation Machines

Made in Sweden since 1941

YOUR TOOLS TO MARKET HALLDE

Equip your kitchen

Showing the complete product assortment.

Product brochures

Machine specific details.

HALLDE Workstation

Accessories to simplify work in the kitchen

Popular Cutting Tools

– with examples of results.

Concept folders

Show how HALLDE can be used beneficially in different types of preparation concepts.

Prepare an extra delicious pizza topping
– easily and cost-efficiently

Preparation for Patisseries Confectioners and Bread bakeries

Preparation of texture modified food and drinks
– Good food in elderly care and healthcare

Raw Food
– nutritious and colourful shapes

Prepare your own unique taco buffet
– Easy, tasty and cost-efficiently

Cost Cut

ROI – Return On Investment

Shows how much time and money are saved by using a HALLDE vs. hand cut!

HALLDE®

Food Preparation Machines

Made in Sweden

hallde.com

© AB Hällde Maskiner Spare Parts 2026