Service Manual

Vegetable Preparation Machine RG-250

Date: 2015-08-27

Approved: Henrik Artursson

Table of contents

GENERAL **3**

Installation, operation and cleaning 3

Tools 3

Lubrication and thread locking 3

REMOVAL AND REPLACEMENT OF PARTS **4**

Machine housing panels 4

On/Off switches 6

Feed hopper switch 8

Pusher plate switch 10

RC Network 11

1CON 11

2CON 13

Motor capacitors 13

1OL overload 14

Motor 16

Seal washer 18

Rubber seal washer (knife shaft) 20

Planetary gears 22

Bearings 23

Pusher plate shaft bearings 24

SERVICE PROCEDURES AND ADJUSTMENTS **26**

Electrical controls test procedure 26

Motor test 27

ELECTRICAL OPERATION **28**

Component function 28

Component location 29

Sequence of operation 29

Electrical diagram 30

TROUBLESHOOTING **2**

General

This service manual gives instructions for removal and replacement of parts including service procedures and adjustments for the vegetable preparation machine RG-250.

This service manual is prepared for the use of trained service technicians and should not be used by those not properly qualified.

Installation, operation and cleaning

Refer to HALLDE User Manual.

Tools

- Standards set of hand tools
- Gear puller
- HALLDE wrench part number 1184 for removal of decoring screw
- Standard VOM/Multimeter with AC current tester

Lubrication and thread locking

- Loctite 242 or equivalent
- Grease for lubrication of planetary gears
- Food safe lubrication for lubricating seal washer
- Mineral oil for lubrication feed handle shaft and link sleeve

Removal and replacement of parts

Machine housing panels

Note! Disconnect the electric power to the machine!

1. Remove plunger/pestle from the feed tube.

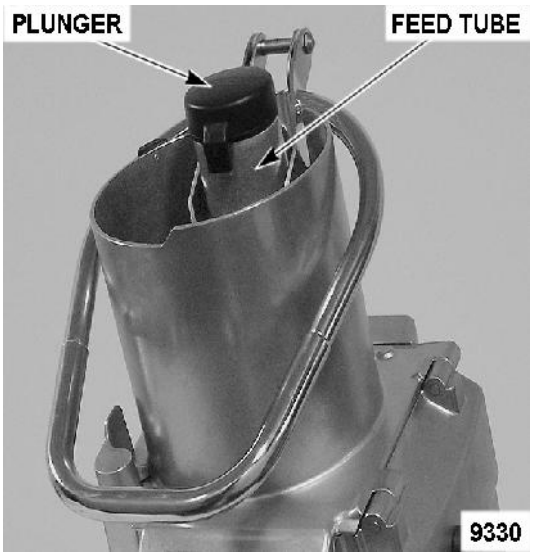

2. Remove left and right side louvers.

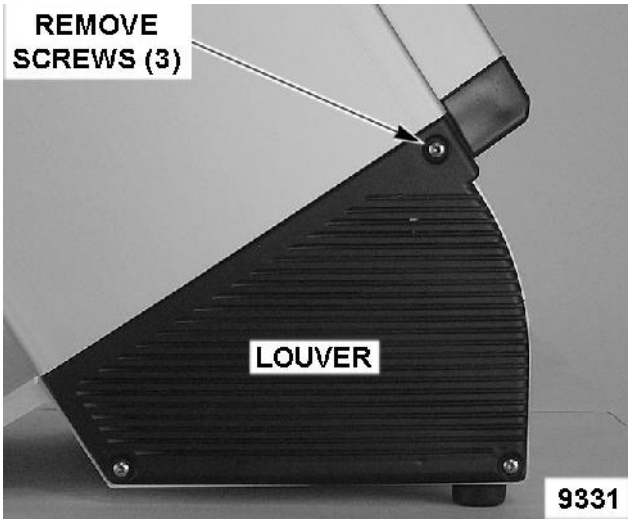

3. Remove left side fan plate from base to access mounting nuts. The fan plate is secured by mounting slots in the base and is a close tolerance fit.

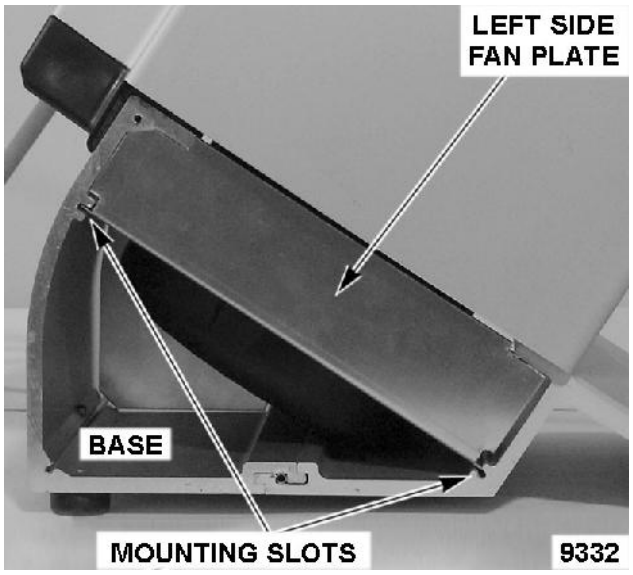

4. Turn machine upside down and place a support (piece of 2x4 lumber or equivalent) under the feed hopper.

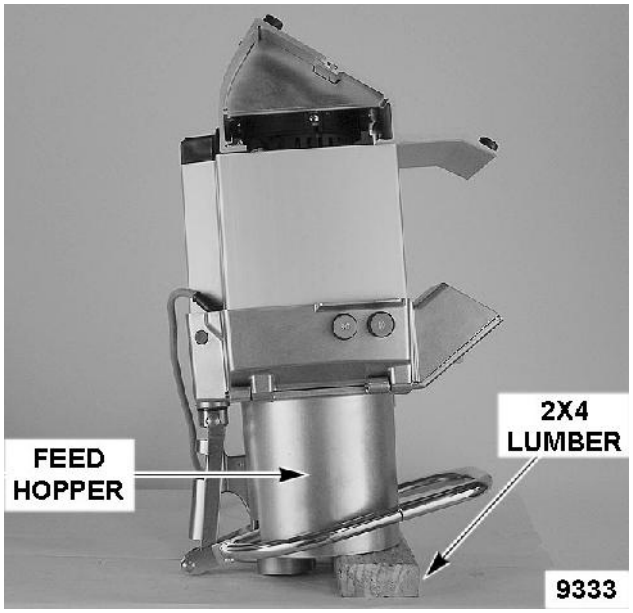

5. Remove mounting nuts from studs then lift base from machine.

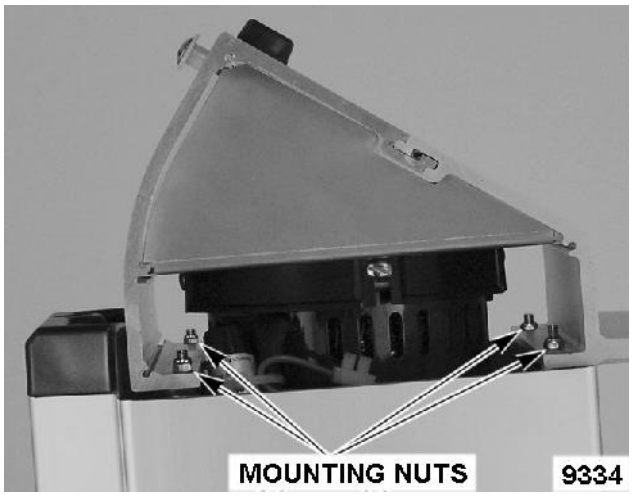

6. Lift machine housing panels (left, right, front and rear) to remove. The left and right side panels are held to the studs by mounting slots in the panels. The front and rear panels are secured by an interlocking fit with the left and right side panels.

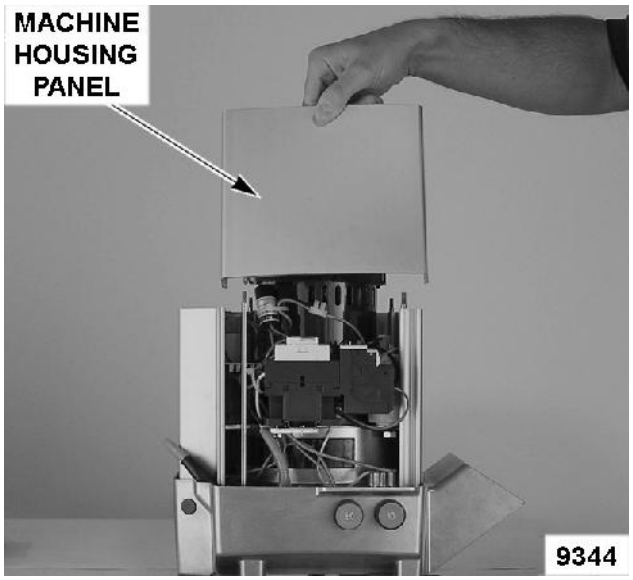

7. Reassemble in reverse order.

On/Off switches

Note! Disconnect the electric power to the machine!

1. Remove right side machine housing panel as outlined under MACHINE HOUSING PANELS.
2. Lift the locking tab to release switch from actuator body.

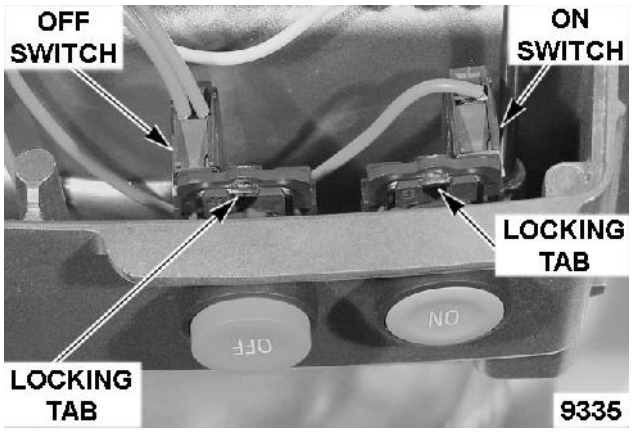

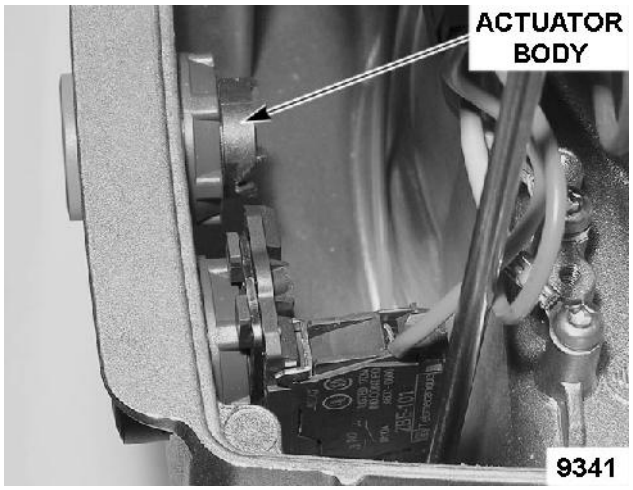

3. Disconnect lead wires from switch.

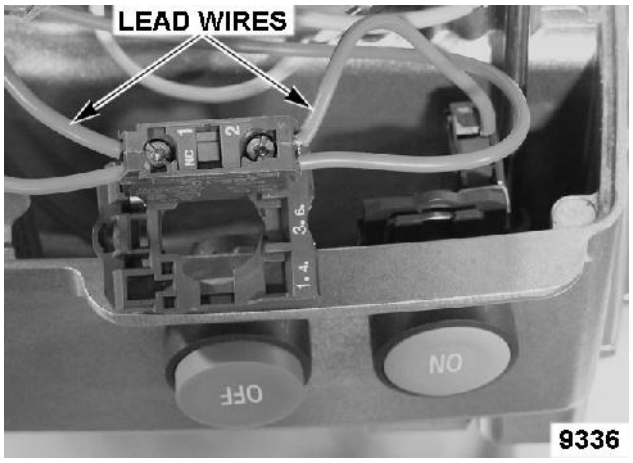

4. Unscrew retaining ring from actuator body then remove actuator from machine.

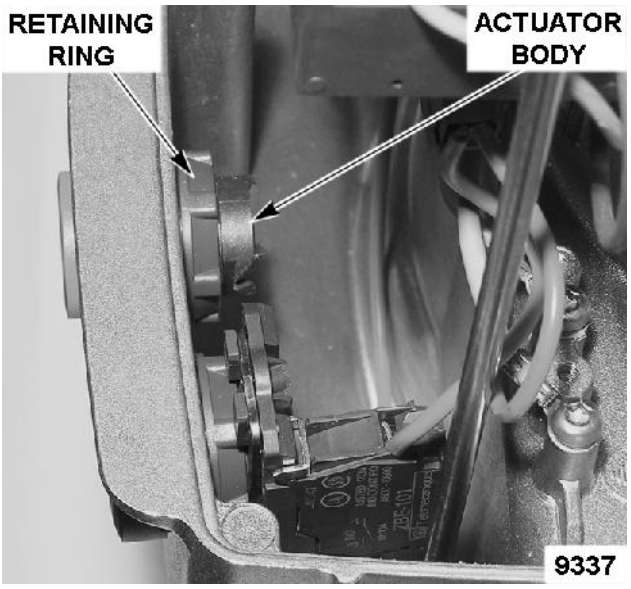

5. Reassemble in reverse order and check for proper operation. When installing a replacement switch, press the switch onto actuator body until locking tab snaps into place to secure.

Feed hopper switch

Note! Disconnect the electric power to the machine!

1. Remove left side and rear machine housing panels as outlined under MACHINE HOUSING PANELS.

2. Remove OFF switch from actuator body as outlined under ON/OFF SWITCHES.

3. Disconnect feed hopper switch lead wires from the OFF switch and at the connecting splice.

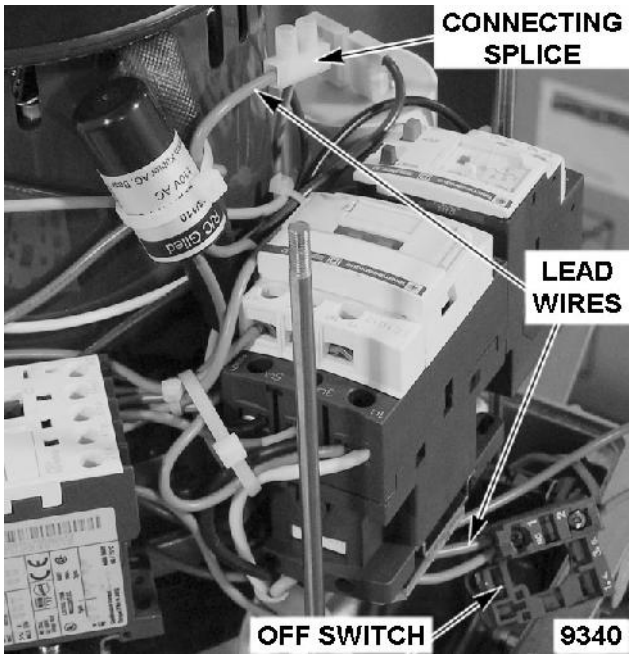

4. Unscrew the switch to remove from machine.

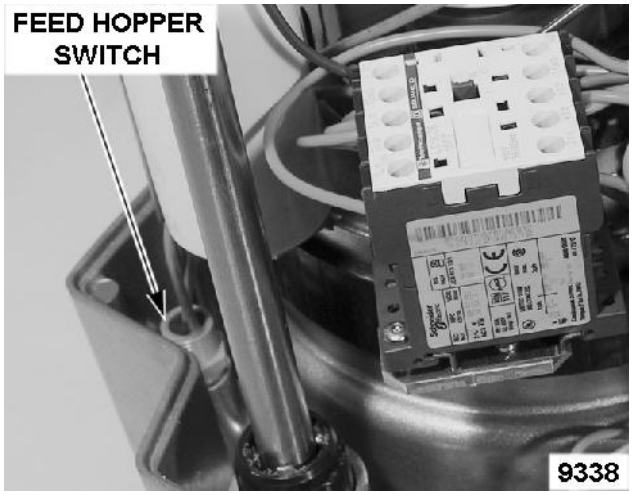

5. When installing feed hopper switch, thread the switch into the hole until it stops turning. Tighten the switch approximately 1/8 of a turn more to secure it. Do not over tighten or damage to the switch may occur.

6. Reassemble in reverse order.

7. Perform ELECTRICAL CONTROLS TEST PROCEDURE as outlined in SERVICE PROCEDURES AND ADJUSTMENTS.

Pusher plate switch

Note! Disconnect the electric power to the machine!

1. Remove right side and rear machine housing panels as outlined under MACHINE HOUSING PANELS.

2. Disconnect lead wires from switch.

3. Remove switch from machine.

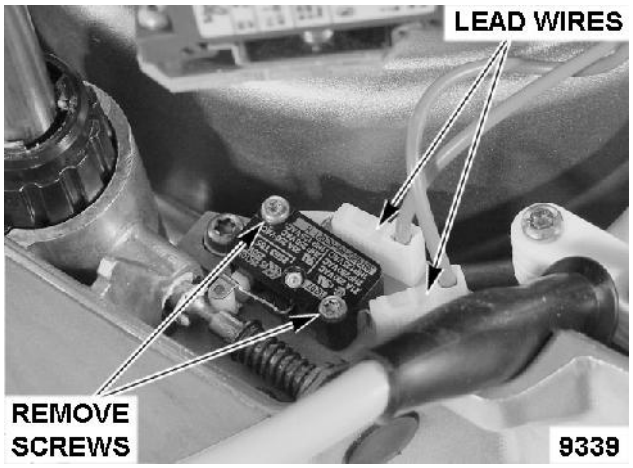

4. Reassemble in reverse order. If switch adjustment is necessary, the hole tolerance for the switch mounting bracket is the only available adjustment. The switch should open when pin engages roller. Loosen the mounting bracket screws and re-position the switch toward pusher plate shaft. Tighten screws and re-check operation. If activator pin does not return smoothly when released, remove mounting bracket screws then remove pin from bracket. Apply Omega 58 lubricant to the O-ring and re-install.

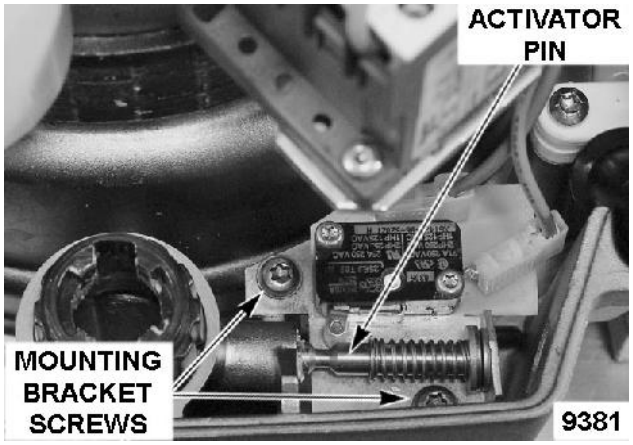

5. Perform ELECTRICAL CONTROLS TEST PROCEDURE as outlined in SERVICE PROCEDURES AND ADJUSTMENTS.

RC Network

Note! Disconnect the electric power to the machine!

1. Remove right side machine housing panel as outlined under MACHINE HOUSING PANELS.

2. Remove wire tie securing RC network.

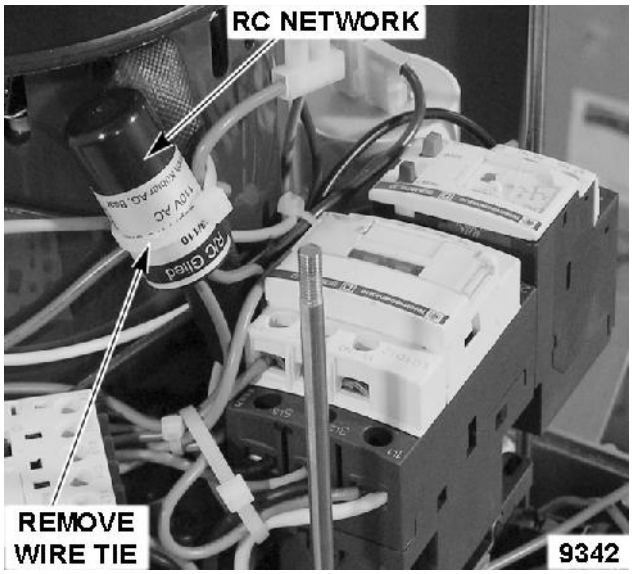

3. Disconnect lead wires from 1CON terminals A1 and A2.

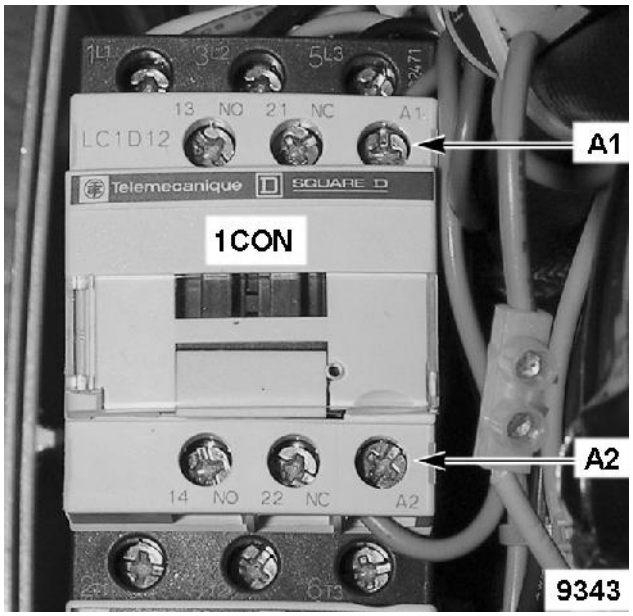

4. Reassemble in reverse order and check for proper operation.

1CON

Note! Disconnect the electric power to the machine!

1. Remove machine housing panels as outlined under MACHINE HOUSING PANELS.

2. Disconnect lead wires from 1CON terminals 1L1 3L2 5L3.

3. Loosen 1CON terminal screws 2T1 4T2 6T3.

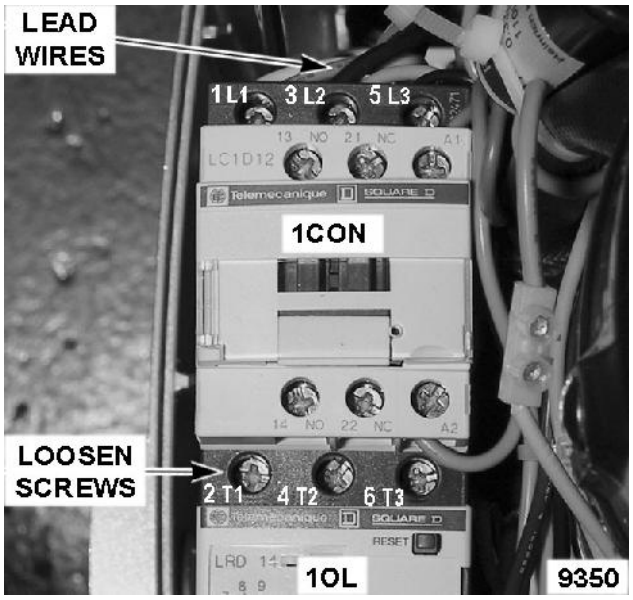

4. Separate 1OL from 1CON. Lift 1OL at rear while rotating upwards to clear the stud.

5. Remove screw securing 1CON to DIN rail then slide 1CON off rail.

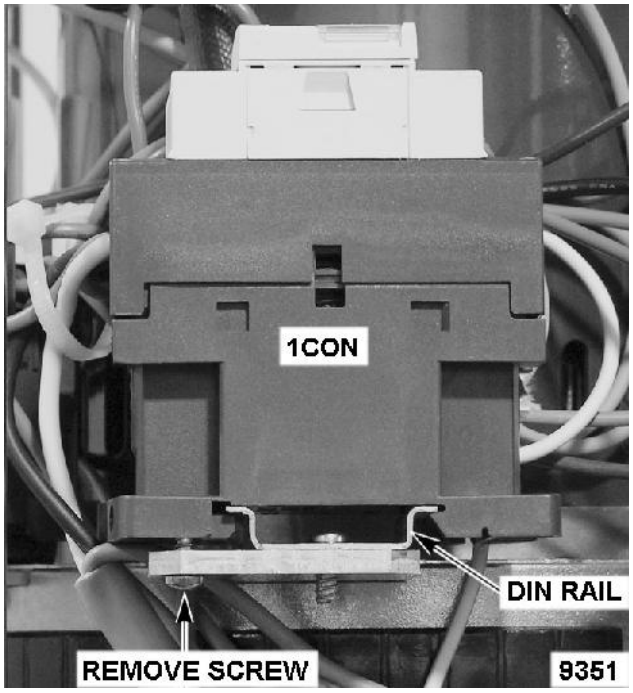

6. Reassemble in reverse order and check for proper operation.

2CON

Note! Disconnect the electric power to the machine!

1. Remove right side and rear machine housing panels as outlined under MACHINE HOUSING PANELS.

2. Disconnect lead wires from 2CON.

3. Remove screw securing 2CON to DIN rail then slide 2CON off rail.

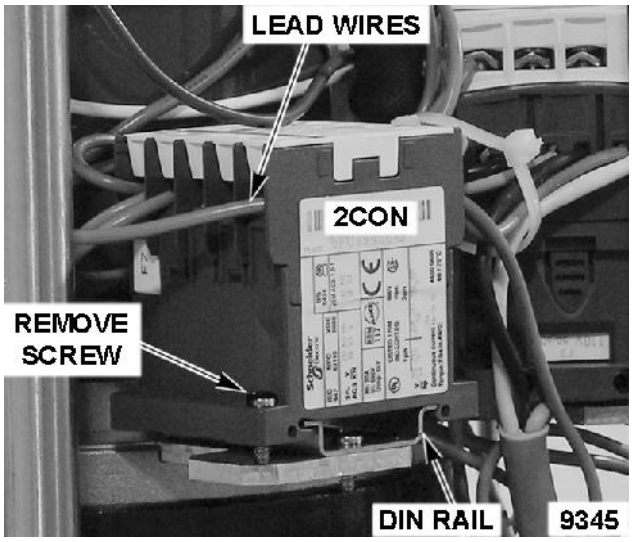

4. Reassemble in reverse order and check for proper operation.

Motor capacitors

Note! Disconnect the electric power to the machine!

1. Remove machine housing panels as outlined under MACHINE HOUSING PANELS.

2. Disconnect lead wires from capacitor.

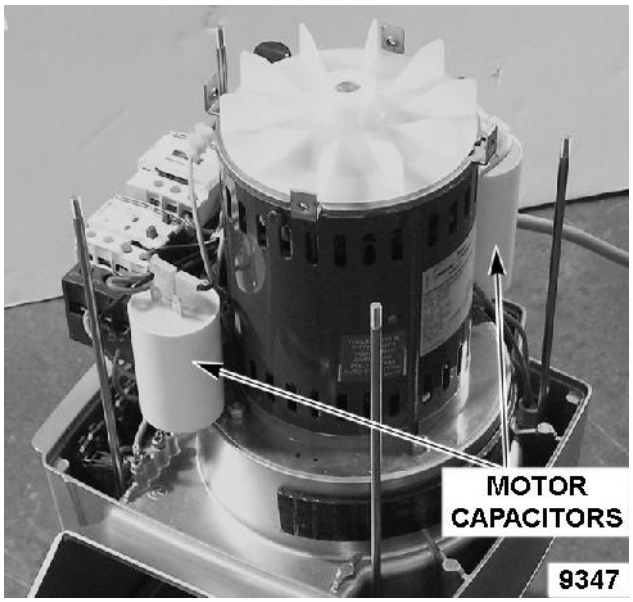

3. Remove capacitor from motor plate. When installing a replacement capacitor, remove threaded insert from bottom of original capacitor then install on replacement capacitor.

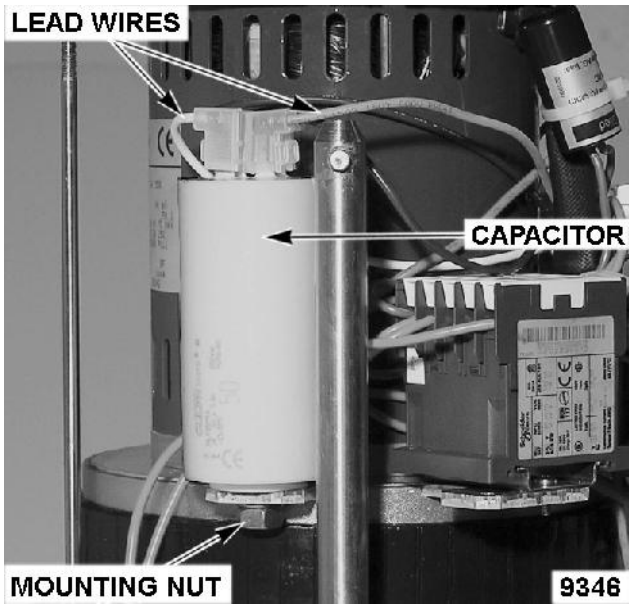

4. Reassemble in reverse order and check for proper operation.

1OL overload

Note! Disconnect the electric power to the machine!

1. Remove right side, front and rear machine housing panels as outlined under MACHINE HOUSING PANELS.

2. Disconnect lead wires from 1OL overload. Remove wire ties as necessary to access lead wires.

3. Loosen 1CON terminal screws 2T1 4T2 6T3.

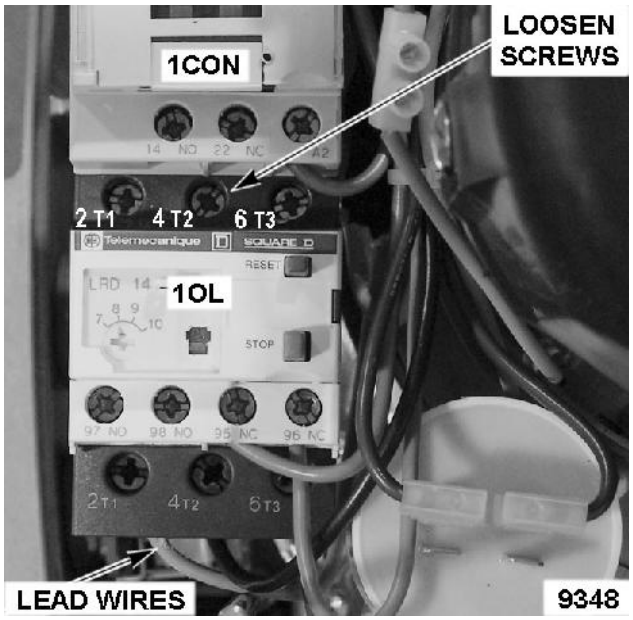

4. Separate 1OL from 1CON. Lift 1OL at rear while rotating upwards to clear the stud.

5. To install:
    a. Open cover of 1OL
    b. Set the overload current dial to 7 A.
    c. Set the manual/automatic reset to automatic, the letter A will be visible on the face of the switch when automatic reset is selected

    d. Close cover

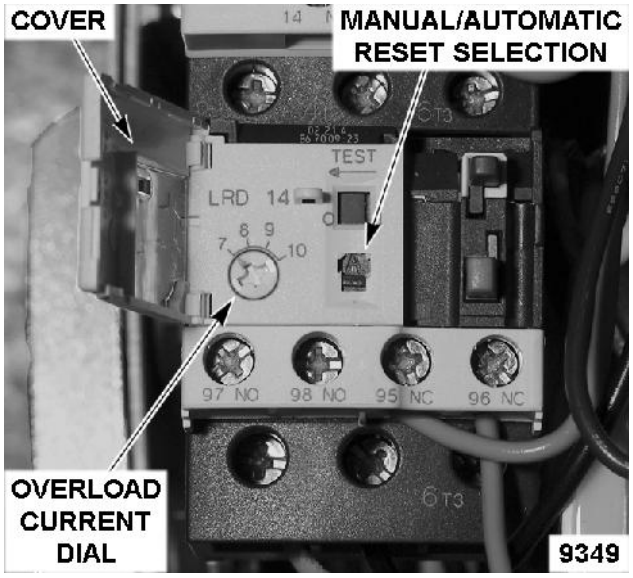

6. Reassemble in reverse order and check for proper operation.

Motor

Note! Disconnect the electric power to the machine!

1. Remove machine housing panels as outlined under MACHINE HOUSING PANELS.
2. Remove capacitors as outlined under MOTOR CAPACITORS but leave the capacitors lead wires connected.
3. Remove 2CON as outlined under 2CON but leave the 2CON lead wires connected.
4. Disconnect motor lead wires from 1CON 3L2 terminal and 1OL 2T1 and 6T3 terminals.

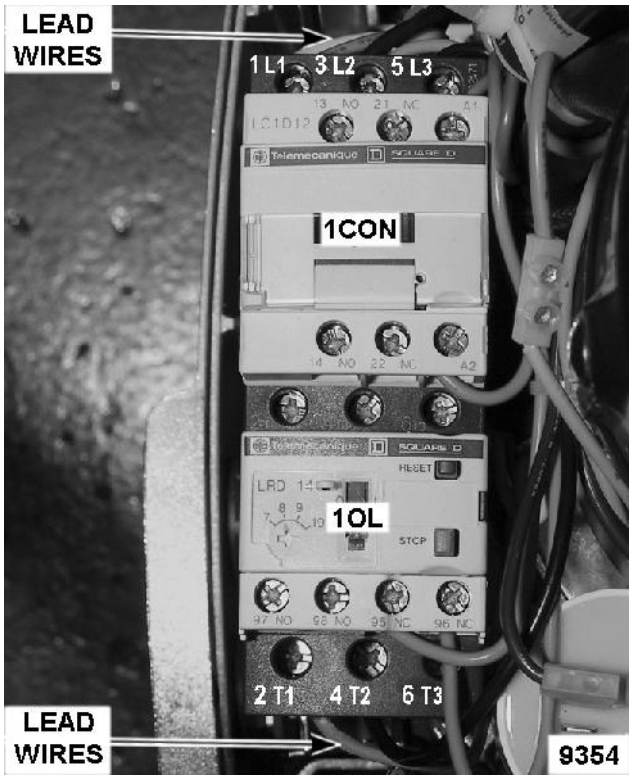

5. Remove screw securing 1CON/1OL assembly to DIN rail then slide 1CON/1OL off rail.

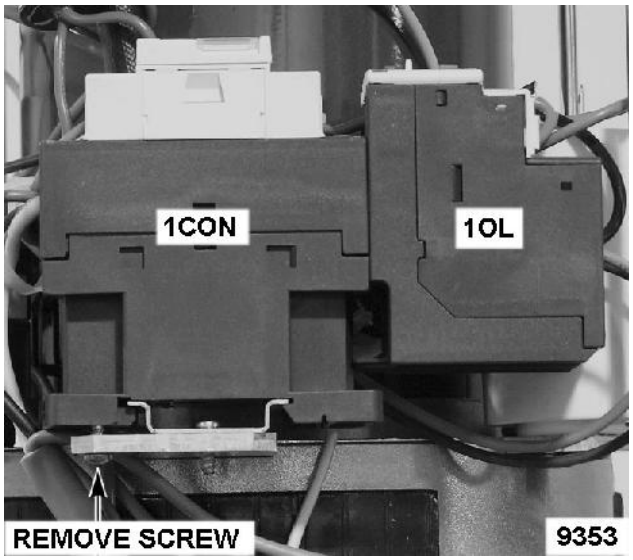

6. Remove motor assembly from knife chamber gear housing.

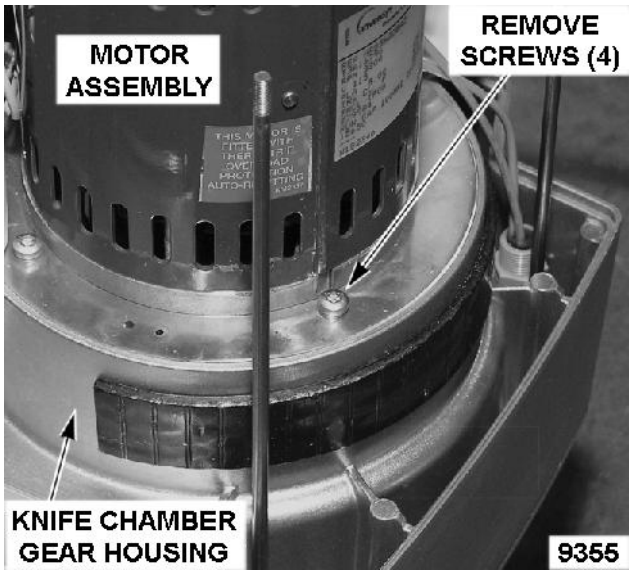

7. Remove motor plate from motor.

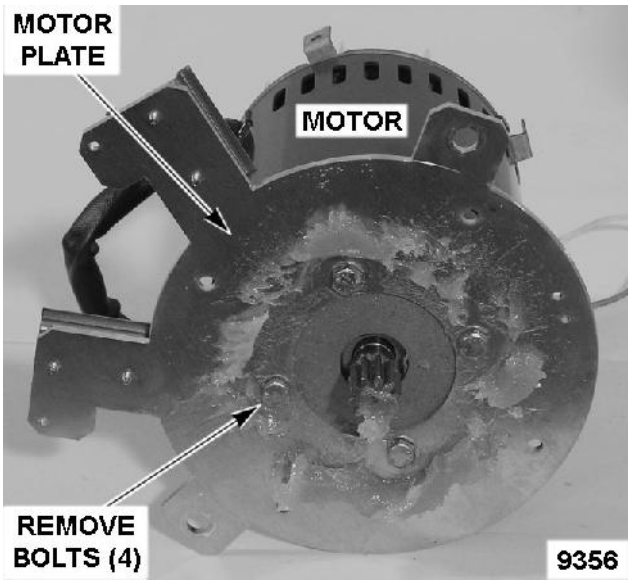

8. Reassemble in reverse order and check for proper operation. When installing, apply a thin coating of gear grease lubricant to the motor shaft pinion gear and planetary gears.

Seal washer

Note! Disconnect the electric power to the machine!

1. Remove pusher plate from machine.

2. Unlock feed hopper then remove from hinge pins.

3. Remove decoring screw, cutting plate and ejector plate. Use decoring screw wrench supplied with food processor. Turn screw clockwise to remove (left hand thread).

4. Loosen set screw and remove carrier pin from knife shaft. The carrier pin set screw and the ejector plate pins (threaded) are secured with Loctite and may require heating before they can be loosened.

5. Remove ejector plate pins (threaded) and thrust sleeve from knife shaft.

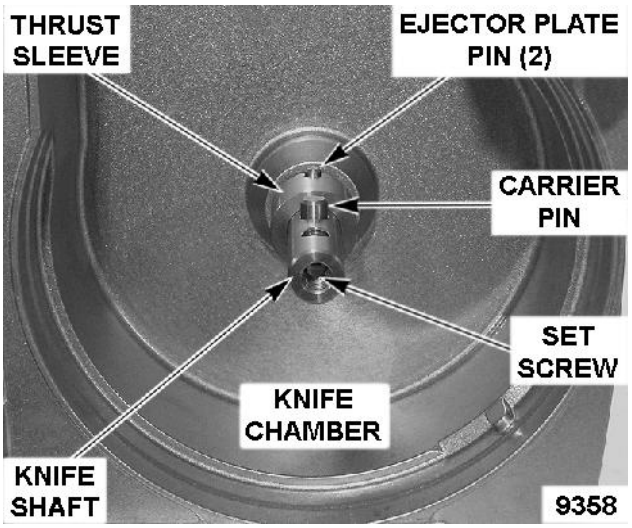

6. Remove seal washer from knife shaft.

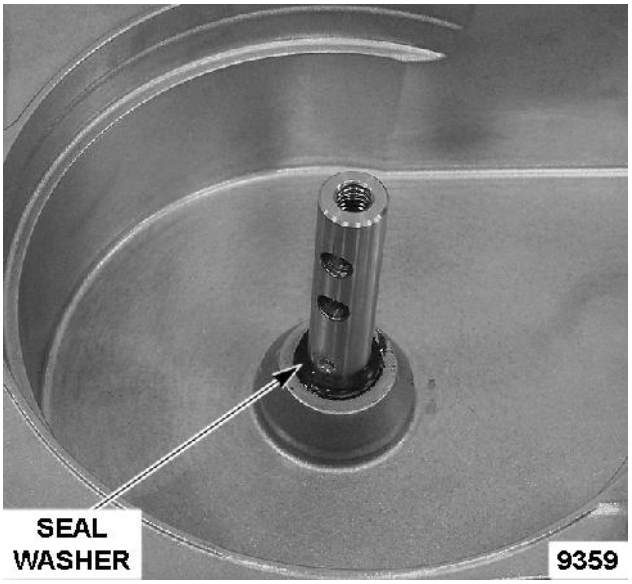

7. To install:

    a. Lubricate seal washer with food safe lubricant then place the seal washer onto knife shaft with the beveled side up.

    b. Using thrust sleeve, push the seal washer down the shaft and align the thrust sleeve mounting holes to ejector pin holes in knife shaft.

    c. Apply Loctite 242 to threads of ejector pin screws then install the screws to secure thrust sleeve to knife shaft. With thrust sleeve installed, the seal washer is properly seated to knife chamber hub.

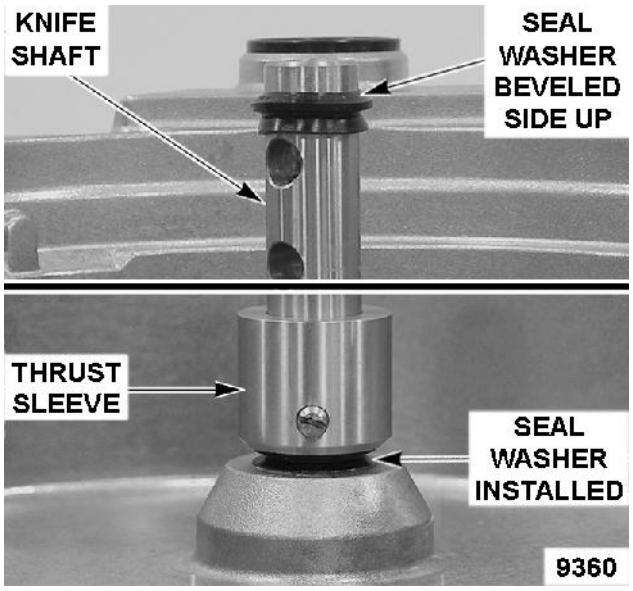

8. Apply Loctite 242 to threads of carrier pin set screw then install the carrier pin. Tighten set screw to secure carrier pin to knife shaft.

9. Install ejector plate, cutting plate and decoring screw.

10. Check for proper operation.

Rubber seal washer (knife shaft)

Note! Disconnect the electric power to the machine!

1. Remove seal washer as outlined under SEAL WASHER.

2. Remove motor as outlined under MOTOR.

3. Lift planetary ring from knife chamber gear housing.

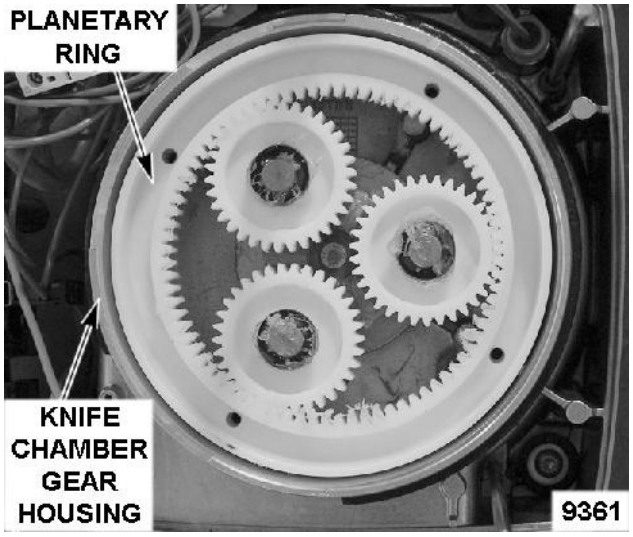

4. Remove screws securing planetary carrier assembly to knife chamber gear housing.

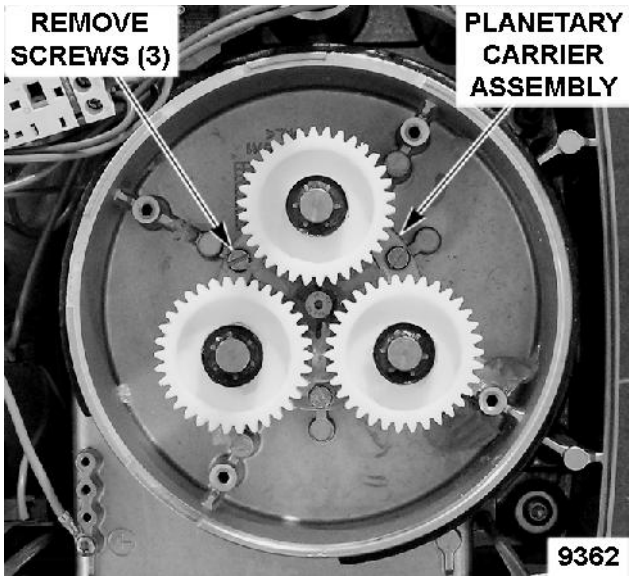

5. Place machine on its side. Using a brass punch or soft face hammer, strike the knife shaft at the opposite end to separate the planetary carrier assembly from knife chamber gear housing.

6. Remove planetary carrier assembly from knife chamber gear housing.

7. Remove shaft seal from the opening in knife chamber gear housing.

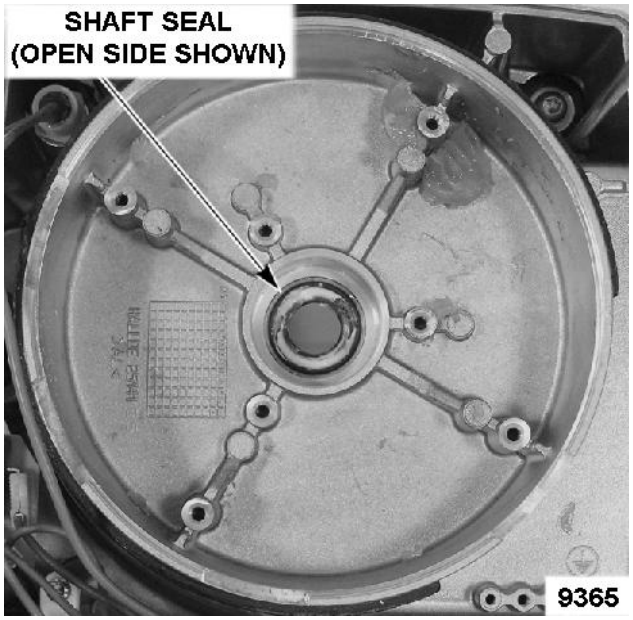

8. Reassemble in reverse order and check for proper operation. When installing shaft seal, position the seal with the closed side down then press the seal into the opening. Apply gear lubricant in the open side.

Planetary gears

Note! Disconnect the electric power to the machine!

1. When installing a planetary gear (planetary ring or planetary wheel), all the gears should be replaced at the same time. Install the planetary wheels using new planetary washers (retaining rings). A 15 mm socket can be used to press the planetary washers evenly onto shaft.

2. Remove motor as outlined under MOTOR.

3. Lift planetary ring from knife chamber gear housing.

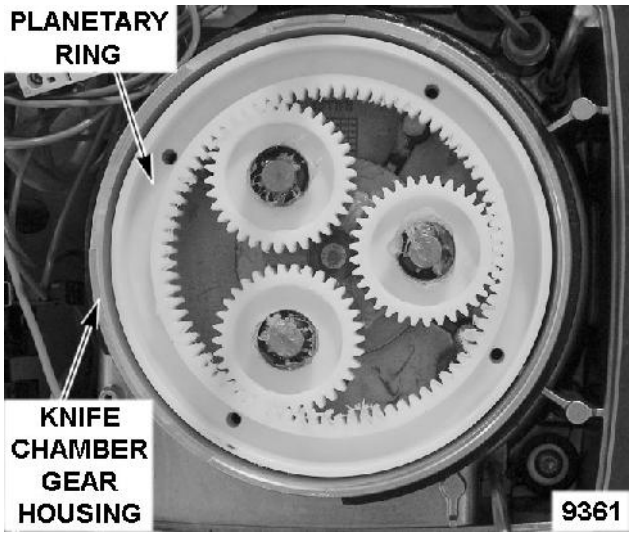

4. Remove planetary washer (retaining ring) then lift planetary wheel from shaft.

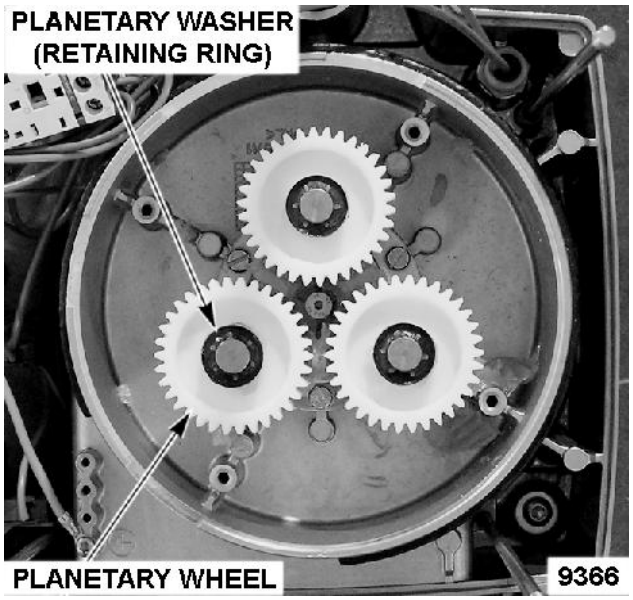

5. Reassemble in reverse order and check for proper operation. Don not re-use the retaining rings when assembling the planetary wheels. When installing planetary gears, apply a thin coating of gear lubricant to all gear teeth.

Bearings

Note! Disconnect the electric power to the machine!

1. Remove seal washer as outlined under SEAL WASHER.
2. Remove motor as outlined under MOTOR.
3. Remove planetary gears as outlined under PLANETARY GEARS.
4. Remove screws securing planetary carrier assembly to knife chamber gear housing.

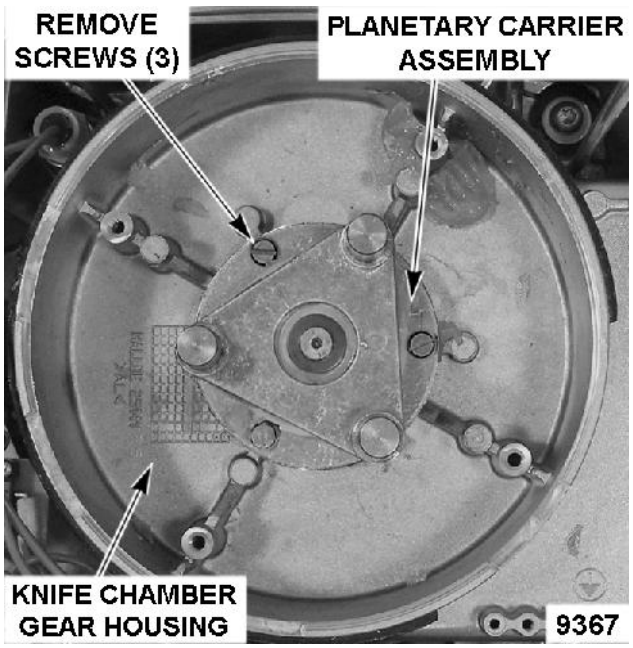

5. Using a gear puller, remove planetary carrier assembly from knife chamber.
6. Remove planetary carrier from knife shaft. The screw is secured with Loctite and may require heating before it can be removed. When installing, apply Loctite 242 to the threads.

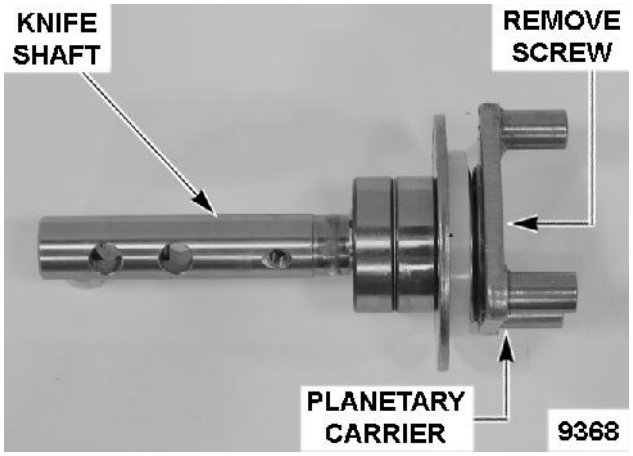

7. Using a gear puller, remove planetary carrier from knife shaft. A pressure spring is mounted behind the planet carrier to apply a force on the assembly. While removing, hold the knife shaft in place

8. Lift the spring, disk brake and brake shim off knife shaft.

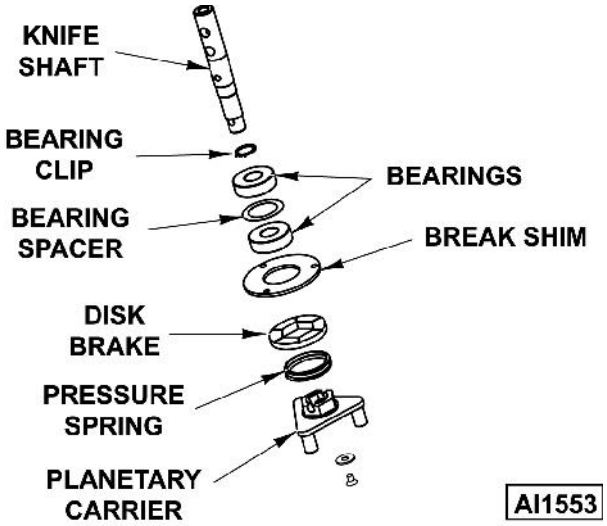

9. Reassemble in reverse order and check for proper operation.

Pusher plate shaft bearings

1. Remove pusher plate from machine.

2. Loosen set screw and remove pin from pusher plate shaft. The screws are secured with Loctite and may require heating before they can be loosened. When installing, apply Loctite 242 to the threads.

3. Remove screws securing link sleeve to pusher plate shaft.

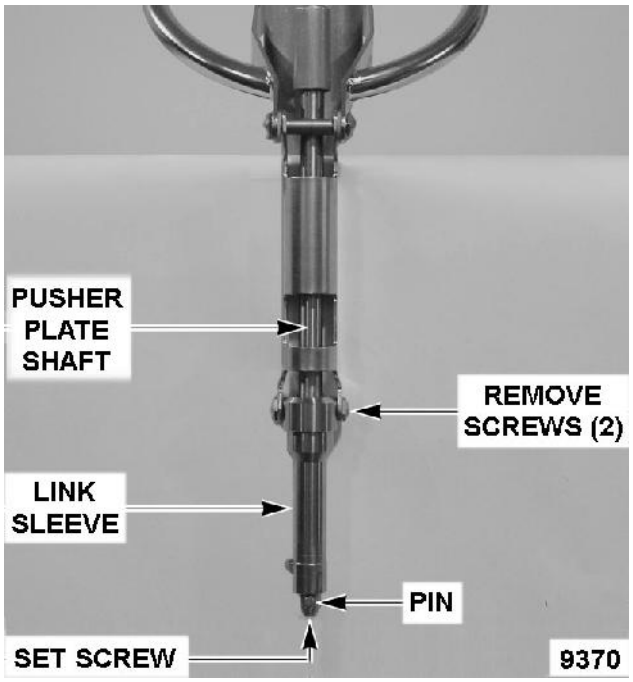

4. Slide the link sleeve off pusher plate shaft.

5. Remove bushings from link sleeve.

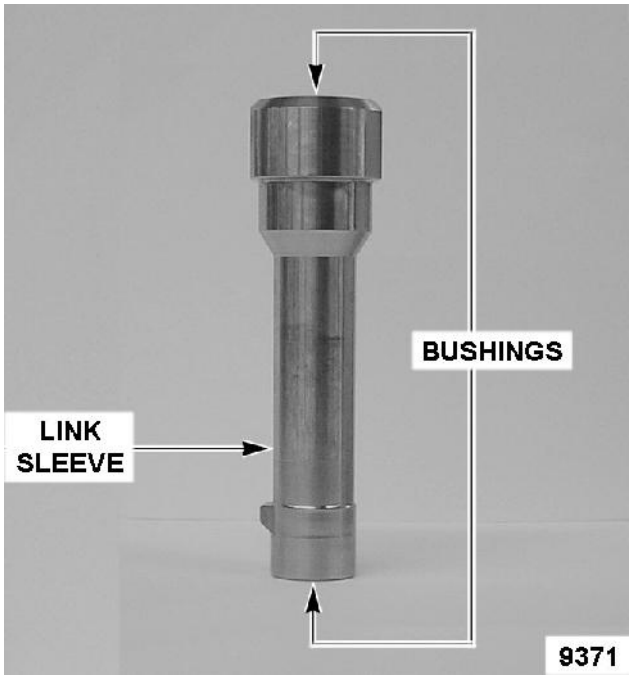

6. Reassemble in reverse order and check for proper operation. When installing, apply a light amount of mineral oil to the pusher plate shaft.

Service Procedures and Adjustments

Electrical controls test procedure

1. Remove decoring screw and cutting tools.
2. Connect food processor to the proper voltage source.
    a. Close feed hopper and engage locking knob.
    b. Position pusher plate into the feed hopper.
3. Press ON button and motor should start.
4. Press OFF button and motor should stop
5. Press ON button, motor starts. Lift pusher plate out of feed hopper and slowly rotate to the left.
    a. Motor should stop when the edge of pusher plate is no more than 3 .0 cm from the inside edge of feed hopper. If motor operates outside of this dimension, reposition the pusher plate switch and re- test.

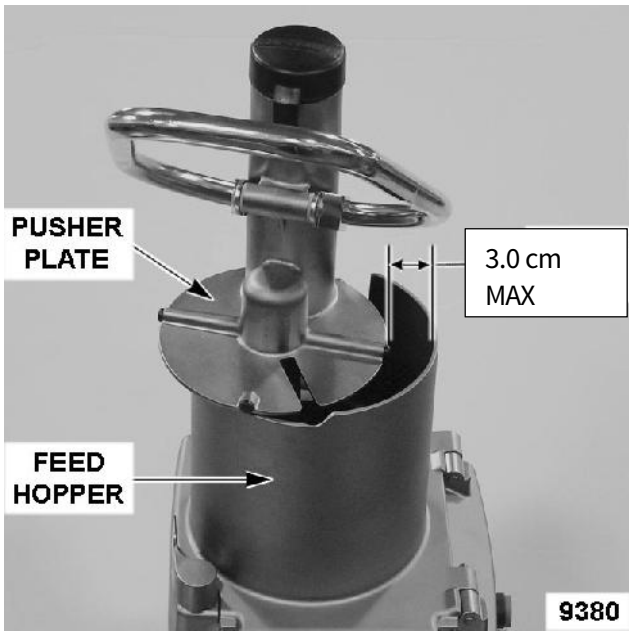

6. Position pusher plate over the feed hopper and motor should restart. Press stop button.
7. Lift pusher plate to its highest position and hold it there. The positioning pin on pusher plate shaft should keep the pusher plate from being removed from feed hopper. Rotate pusher plate to the left and remove from feed hopper.
8. Press ON button. 2CON should energize but motor should not start.
9. Turn locking knob to the unlocked position. Raise feed hopper approximately 1.5 cm and 2CON should de-energized. Lower the feed hopper and 2CON remains de-energized.

Motor test

Note! Disconnect the electric power to the machine!

1. Access motor as outlined in REMOVAL AND REPLACEMENT OF PARTS.
2. Disconnect motor lead wires.
3. Set VOM to measure resistance. Connect meter leads to test the motor windings and thermal overload according to the motor lead wire colors. See table below.

TEST	WIRE COLORS	RESISTANCE* (OHMS)
Main Winding	Black & Blue	0.8 to 1.0
Auxiliary Winding	Black & White	1.6 to 1.9
Thermal Overload	Blue & White	0 (approx.)
*Resistance values at room ambient.		

Electrical Operation

Component function

1M Motor	Turns cutting tool to slice product. Protected by thermal overload with auto reset.
1CON	Controls power to 1M Motor.
2CON	Controls power to 1CON
1OL	Monitors current draw of 1M motor. Removes power from motor if current draw exceeds the over current setting
2PB ON Switch	Provides initial power to control circuit (momentary on).
1PB OFF Switch	Removes power from control circuit (momentary off).
1LS Feed Hopper Switch	Ensures feed hopper is down (reed switch closed) before food processor operation can begin.
2LS Pusher Plate Switch	Held open when pusher plate is raised and slightly rotated to the left to stop 1M motor.
Motor Capacitors	Shifts electrical phase to improve running efficiency.
1RC Network	Filters electrical noise at contactor (RC circuit

Component location

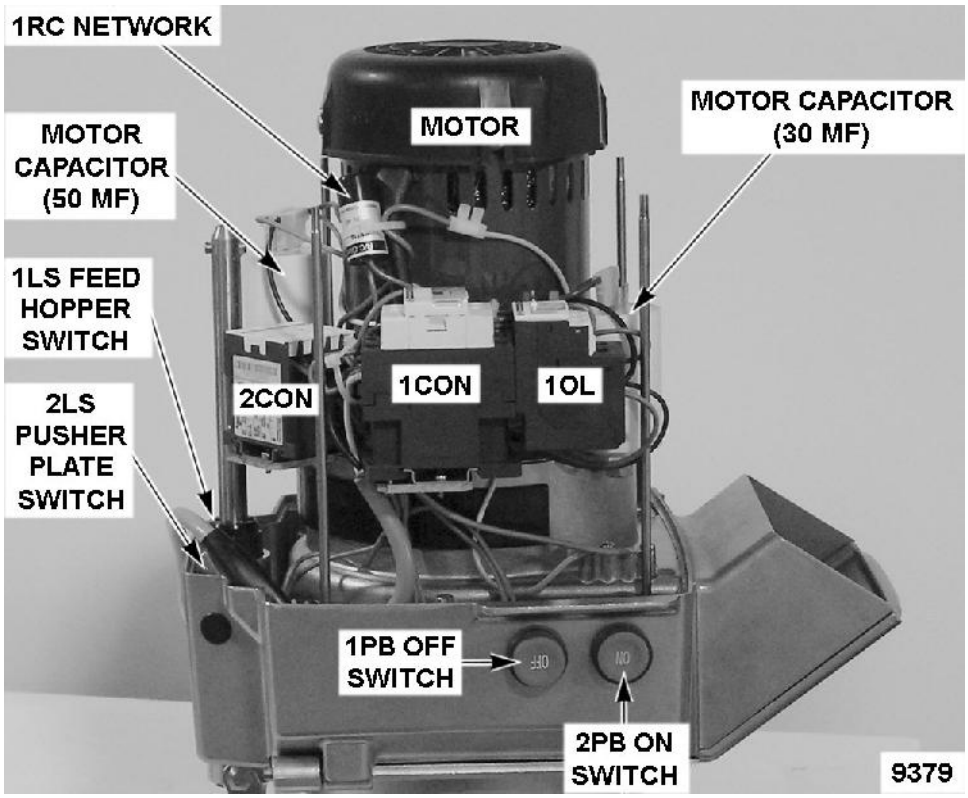

Sequence of operation

1. Conditions.

    a. Machine properly connected to power and properly grounded.

    b. 1M Motor thermal overload is closed.

    c. 1LS feed hopper switch is closed (feed hopper down and locked).

    d. 1PB OFF switch is closed.

    e. 2PB ON switch is open.

    f. 2LS pusher plate switch is closed (pusher plate inserted into feed hopper).

2. Press 2PB ON switch.

    a. 2CON initially energizes thru 1OL 95/96 contacts.

    b. When 2PB ON switch is released, 2CON remains energized thru 2CON 13/14 latching circuit closed contacts.

    c. 1CON is energized thru 2LS pusher plate switch and 2CON 2/1 closed contacts. With 1CON contacts closed, 1M motor is energized thru 1CON 1OL contacts.

3. If 1LS feed hopper switch is opened, 1CON and 2CON are both de-energized (latching circuit opens) and 1M motor stops. Close 1LS feed hopper switch and press 2PB ON switch to restart 1M motor.

4. If 1PB stop switch is pressed, 2CON is de-energized (latching circuit opens) and 2CON 2/1 contacts open. With 2CON 2/1 contacts open, 1CON is de-energized and 1M motor stops.

5. If 2LS pusher plate switch is opened, (pusher plate out of feed hopper) 1M motor stops. L

6. Latching circuit remains energized so that 1M motor restarts when 2LS pusher plate switch is closed (pusher plate in feed hopper).

Electrical diagram

See user instructions and www.hallde.com for applicable electric diagram.

Troubleshooting

SYMPTOM	POSSIBLE CAUSES
Motor will not start, feed hopper is down and pusher plate is in operating position.	1. No voltage to machine. 2. 1OL tripped - current setting incorrect; or auto reset not selected; or malfunction. 3. Feed hopper switch (1LS) malfunction. 4. OFF switch (1PB) malfunction. 5. ON switch (2PB) malfunction. 6. Activator pin for pusher plate switch not returning to home position (stuck) to allow switch to close. 7. Pusher plate switch (2LS) malfunction. 8. 2CON malfunction.
Motor runs, but stops when ON switch is released.	1. Latching circuit open. 2. OFF switch (1PB) malfunction.
Motor does not stop when pusher plate is raised out of feed hopper and rotated past the 1 3/16" maximum allowable feed hopper opening.	1. Pusher plate switch not adjusted properly. 2. Tab on pusher plate shaft not engaging activator pin; or activator pin stuck; or activator pin spring malfunction.
Motor stops during use, restarts after machine cools.	1. Machine overloaded with product; or excessive feed pressure on pusher plate. 2. 1OL tripped - current setting incorrect; or malfunction. 3. Thermal overload in motor open or malfunction. 4. Binds in planetary drive.
Low output or poor cutting.	1. Wrong combination of cutting tools used. 2. Cutting tools dull. 3. Decoring screw not installed.